30440 Agoura Road.
Agoura Hills, CA 91301 USA
Toll Free: (800) 253-2363
Telephone: (805) 933-9970
bendpak.com

Clear Floor Two-Post Lifts

Installation and Operation Manual

Manual P/N 5900265 — Revision B1 — November 2025

Models:

- 10AP
- 10AP-168
- 10APX
- 10APX-181

Original instructions in the English language

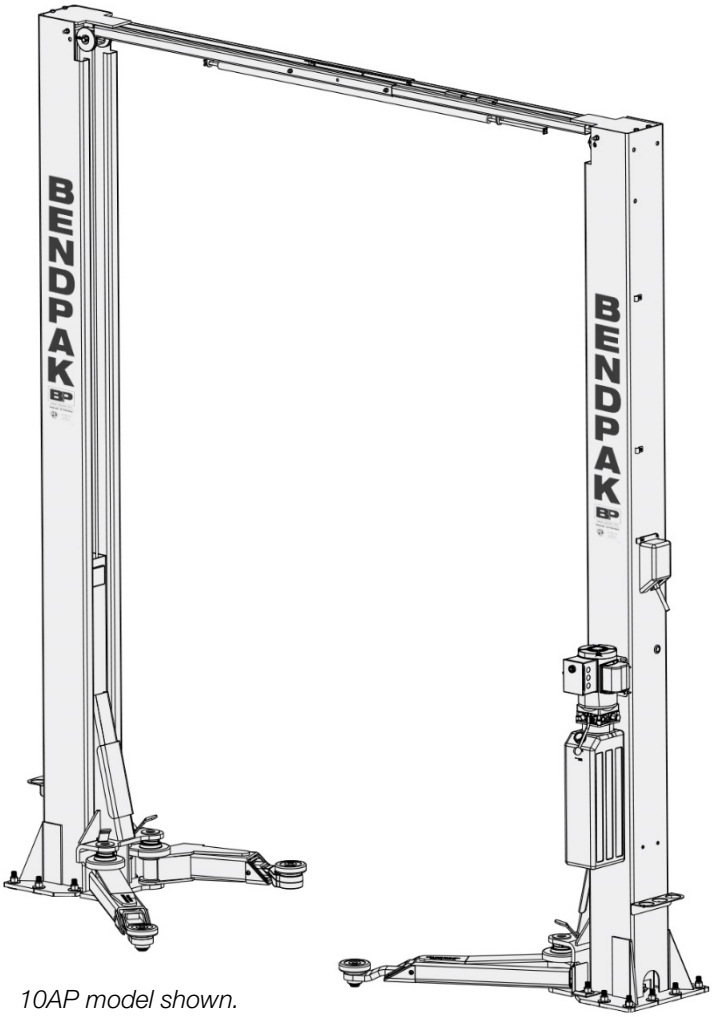

10AP model shown.

⚠ DANGER

IMPORTANT Safety Instructions, save these instructions! Read the *entire* contents of this manual ***before*** using this product. Failure to follow the instructions and safety precautions in this manual can result in severe injury or death. Make sure all other operators also read this manual. Keep the manual near the product for future reference. ***By proceeding with setup and operation, you agree that you fully understand the contents of this manual and assume full responsibility for product use.***

Manual. 10AP Series Two-Post Lifts, *Installation and Operation Manual*, Part Number 5900265, Revision B1, released November 2025.

Copyright. Copyright © 2025 by BendPak Inc. All rights reserved. Copies of this document can be made if it is agreed that: full attribution goes to BendPak Inc., changes to the content is not authorized, no rights are gained to any of the content, and copies will not be used for commercial purposes.

Trademarks. BendPak and the BendPak logo are registered trademarks of BendPak Inc. All other company, product and service names are used for identification only. All trademarks and registered trademarks mentioned in this manual are the property of their respective owners.

Limitations. Every effort has been made to ensure that complete and accurate instructions are included in this manual. However, product updates, revisions, and/or changes may have occurred since this manual was published. BendPak reserves the right to change any information in this manual without incurring any obligation for equipment previously or subsequently sold. All drawings are for reference only; do not scale. BendPak is not responsible for typographical errors in this manual. The latest version of this **manual for the 10-AP can be found on the BendPak website**.

BendPak

SCAN FOR DIGITAL PDF

Warranty. The BendPak warranty is a commitment to the quality and value of this product. Contact the nearest BendPak dealer or visit **www.bendpak.com/support/warranty** for full warranty details.

Safety. The 10AP Series Lifts are designed and manufactured with safety in mind. Installer and operator safety depends on proper training and thoughtful operation. Do not set up, operate, maintain, or repair the Lift without reading and understanding this manual and the labels on the unit. ***Do not use the Lift unless it can be done so safely!***

Owner Responsibility. To properly maintain the Lift and ensure the operator's safety, it is the responsibility of the product owner to read and follow the following:

- Follow all installation, operation, and maintenance instructions.
- Make sure the installation of the Lift conforms to all applicable local, state, and federal codes, rules, and regulations, such as state and federal OSHA regulations and electrical codes.
- Read and follow all safety instructions. Keep them readily available for installers and operators.
- Make sure all operators are properly trained on the safe operation of the unit and are properly supervised.
- Do not operate the product until it is confirmed that all parts are securely in place and operating correctly.
- Carefully inspect the product on a regular basis and perform all repairs and maintenance as required.
- Service and maintain the unit using only approved replacement parts.
- Keep the manual with the product and make sure all labels are clean and visible.

BendPak makes no promises, guarantees or assurances that our products meet any state, county, federal or international mandated permits, licenses, codes, standards, certifications, or any other mandates other than what is listed or shown on the BendPak website(s), or any BendPak online or published catalog. Not all BendPak Lift models meet the standards as prescribed by ANSI/ALI ALCTV-(current edition) or ANSI/UL 201. Consult **www.autolift.org** for a complete list of Lift models that meet ANSI/ALI ALCTV-(current edition) or ANSI/UL 201 or contact BendPak via **sales@bendpak.com**. ***Buyer assumes full responsibility for any state, county, federal or international mandated permits, licenses, codes, standards, certifications, or any other mandates required related to the installation and/or operation of any BendPak product.*** BendPak will not be responsible for any charges, fines, liens, or other levies imposed on the Buyer related to any special or regional structural, seismic or any other building code and/or codes such as the Uniform Building Code (UBC), International Building Code (IBC), or any other state, county, federal or international mandated permit, license, code, standard, certification, or other mandate, law, rule, regulation or directive by any other agency, government, administrations, or corporations whether state, county, federal, or international mandated.

Only use the Lift if it can be used safely!

Unit Information. Enter the Model Number, Serial Number, and the Date of Manufacture from the ID label on the unit. This information is required for part or warranty issues.

Model: _____

Serial: _____

Date of Manufacture: _____

Designed and engineered by BendPak Inc. in Southern California, USA. Made in China.

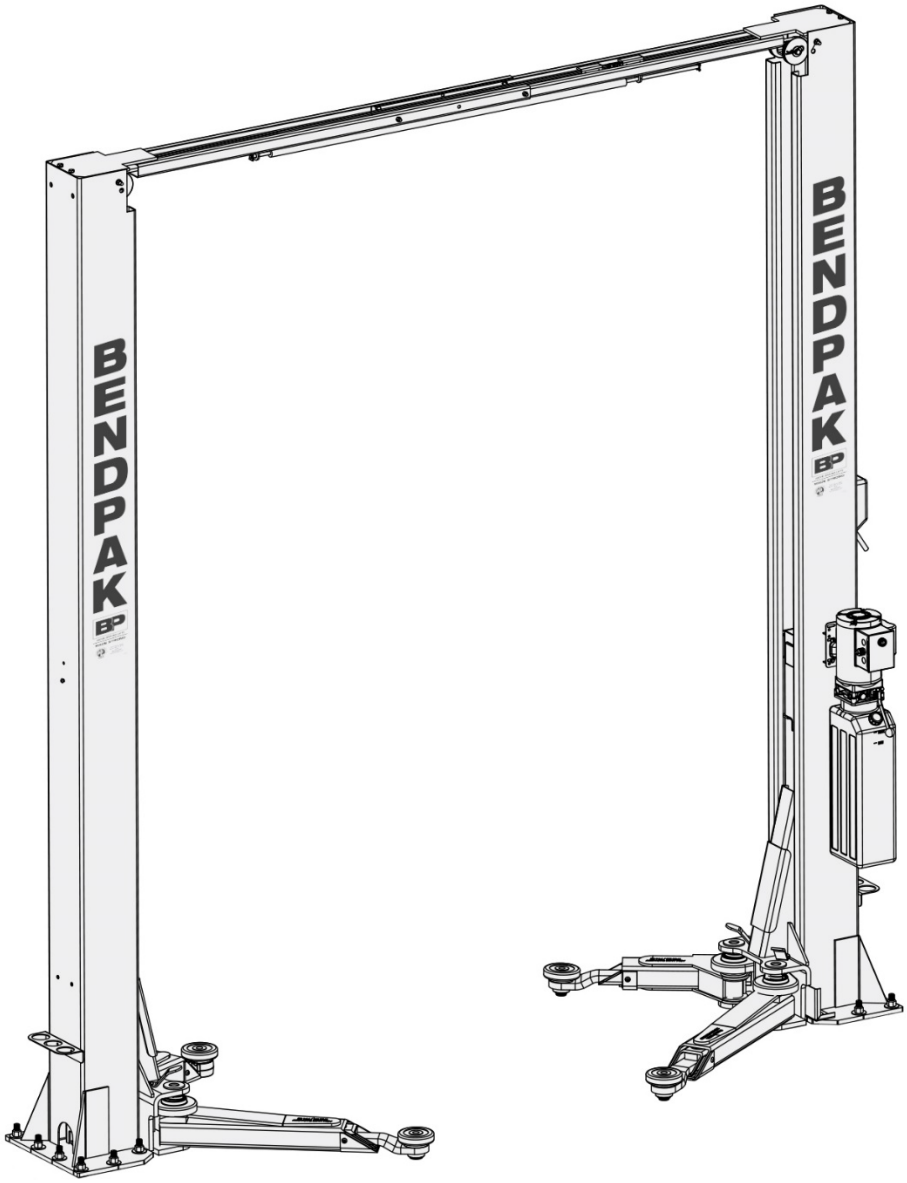

Table of Contents

Introduction 4

Shipping Information 5

Safety Considerations 5

Components 8

Specifications 9

Installation Checklist 11

Installation 12

Operation 63

Maintenance 74

Troubleshooting 83

Wiring Diagrams 87

Labels 95

Parts Drawings 98

ALI Store 116

Maintenance Log 117

Introduction

This manual describes the following BendPak Two-Post Lift models:

- **10AP**. A two-post lift with overall height of 145 in. (3,683 mm) that raises vehicles up to 10,000 lbs. (4,536 kg).
- **10AP-168**. A taller version of the 10AP with overall height of 168 in. (4,267 mm), designed to accommodate taller vehicles.
- **10APX**. A two-post lift with overall height of 157 in. (3,988 mm) that raises vehicles up to 10,000 lbs. (4,536 kg).
- **10APX-181**. A taller version of the 10APX with overall height of 181 in. (4,597 mm), designed to accommodate taller vehicles.

All models have Overhead Assemblies and clear floors, and may be adjusted to either narrow 92 in. (2,337 mm) or wide 102 in. (2,591 mm) drive-through configurations.

⚠ **DANGER** Be very careful when installing, operating, maintaining, or repairing this equipment. Failure to do so could result in property or product damage, injury, or (in very rare cases) death. Make sure only authorized personnel operate this equipment. All repairs must be performed by an authorized technician. Do not make modifications to the unit as this voids the warranty and increases the chance of injury or property damage. Make sure to read and follow all the instructions on the labels on the unit.

This manual is mandatory reading for all users of 10AP Series two-post lifts, including anyone who installs, operates, maintains, or repairs them. Keep this manual on or near the equipment at all times.

Technical support and service is available from the dealer, on the Web at **bendpak.com/support**, by email at **support@bendpak.com**, or by phone at **(888) 856-5820** (follow the prompts).
Online chat is also available at **www.bendpak.com**. Click the chat icon.

Scan this QR Code for up-to-date information and videos on the 10AP series lifts.

SCAN FOR VIDEO

Shipping Information

This equipment was carefully checked before shipping. Nevertheless, the shipment should be thoroughly inspected ***before*** signing to acknowledge that it has been received.

Signing the bill of lading tells the carrier that the items on the invoice were received in good condition. ***Do not sign the bill of lading until after the shipment has been inspected.*** If any of the items listed on the bill of lading are missing or damaged, do not accept the shipment until the carrier makes a notation on the bill of lading that lists the missing or damaged goods.

If missing or damaged goods are discovered ***after*** receiving the shipment and the bill of lading has been signed, notify the carrier at once and request that the carrier perform an inspection. If the carrier will not perform an inspection, prepare a signed statement to the effect that the carrier has been notified (on a specific date), and that the carrier has failed to comply with the request.

It is difficult to collect for loss or damage after giving the carrier a signed bill of lading. If this happens, file a claim with the carrier promptly. Support the claim with copies of the bill of lading, freight bill, invoice, and photographs, if available. Our willingness to assist in helping to process the claim does not make us responsible for the collection of claims or replacement of lost or damaged materials.

Safety Considerations

Read this entire manual carefully before using the 10AP Lift. Do not install or operate the Lift until all installation and operating instructions and warnings are clearly understood. Do not allow anyone else to operate the Lift until they are familiar with all operating instructions and warnings.

⚠ **WARNING** **California Proposition 65**. This product can expose installers and operators to chemicals, including styrene and vinyl chloride, which are on the list of over 900 chemicals identified by the State of California to cause cancer, birth defects or reproductive harm. Always use this product in accordance with BendPak's instructions. For more information, visit **www.p65warnings.ca.gov**.

⚠ **WARNING** BendPak Does not supply hydraulic fluid or lubricants with the Lift. **Always** refer to the Material Safety Data Sheet (MSDS) for safe handling and disposal information. MSDS are available from the hydraulic fluid or lubricant's supplier or manufacturer.

Important Safety Information

When using this equipment, basic safety precautions should always be followed, including:

1. Read all instructions. Use the Lift only as described in this manual.
2. Only operate the Lift between temperatures of 41°F to 104°F (5°C to 40°C).

3. Make sure all operators read and understand this *Installation and Operation Manual*. ***Keep the manual near the Lift at all times***.
4. BendPak recommends referring to the ANSI/ALI ALIS Standard *Safety Requirements for Installation and Service* for more information about safely installing, using, and servicing the Lift.
5. The Lift should only be operated by authorized personnel. Keep children and untrained personnel away from the Lift.
6. Do not make any modifications to the Lift as this voids the warranty and increases the chance of injury or property damage. Use only factory-approved attachments.
7. Do not use the Lift while tired or under the influence of drugs, alcohol, or medication.
8. Touching hot parts can cause burns. Always use care when handling the equipment.
9. Do not operate the Lift with a damaged cord or if any parts have been dropped or damaged – until a qualified service person has examined them.
10. Do not let power cords hang over the edge of a table, bench or counter, or come in contact with hot manifolds or moving fan blades.
11. If an extension cord is necessary, one with a current rating equal to or greater than that of the equipment should be used. Cords rated for less current than the equipment may overheat. Care should be taken to arrange cords so that they will not be tripped over or pulled out.
12. Always unplug equipment from electrical outlets when not in use. Never use the cord itself to pull the plug from the outlet. Grasp plug and pull to disconnect.
13. To reduce the risk of fire, do not operate any equipment in the vicinity of open containers of flammable liquids (like gasoline).
14. Adequate ventilation should be provided when working on operating internal combustion engines.
15. Keep hair, loose clothing, fingers, and all parts of the body away from moving parts.
16. To reduce the risk of electric shock, do not use the Lift, or any equipment, around wet surfaces or expose them to rain.
17. **Always wear safety glasses**! Everyday glasses only have impact resistant lenses; they are not safety glasses.
18. **10AP Series Lifts** are Two-Post Service Lifts. ***Use them only for their intended purpose.***
19. All installers and operators must wear OSHA-approved personal protective equipment ***at all times*** when installing, using, maintaining, or repairing the Lift. Leather gloves, steel-toed work boots, eye protection, back belts, and hearing protection are all ***mandatory***.
20. ***Never*** exceed the rated capacity of the Lift.
21. When the Lift is in use, keep hands and all body parts well away from it, except for the use of the controls.
22. Keep loads balanced on the Lift Arm Assemblies and clear the area immediately if a vehicle is in danger of falling off the Lift.
23. Any modifications to the Lift void the warranty and increase the chance of injury or property damage. ***Do not modify any safety-related features in any way***.
24. The Lift uses electrical energy. If the organization has lockout/tagout policies, make sure to implement them after connecting the Lift to a power source.
25. When handling the hydraulic components ***always wear safety gloves***. In rare cases, a needle-like stream of hydraulic fluid (even at low pressure) can penetrate fingers, hands, or arms. Such a puncture

can feel like a bite, electric shock, or a prick. While it may seem like a minor issue, any amount of hydraulic fluid injected into the human body is a serious issue. Anyone suffering from such a puncture wound should be ***immediately*** taken, as an emergency, to the hospital to determine the extent of the injury. Explain the circumstances of the injury to the attending physician, including what type of hydraulic fluid was involved. Do not assume a puncture wound that could have been caused by hydraulic fluid is a minor issue; it could be life-threatening.

26. Make a visual inspection of the Lift before using it. Do not use the Lift if any missing or damaged parts are found. Instead, take the Lift out of service, then contact an authorized repair facility, the distributor, call BendPak at **(888) 856-5820** (follow the prompts) or email **support@bendpak.com**.
27. BendPak recommends making a ***thorough*** inspection of the Lift at least once a year. Replace any damaged or severely worn parts, decals, or warning labels.

Save these instructions!

Symbols

The following symbols are used in this manual:

⚠ **DANGER**	Calls attention to a hazard that ***will*** result in death or injury.
⚠ **DANGER**	Calls attention to an electrical hazard that ***will*** result in death or injury.
⚠ **WARNING**	Calls attention to a hazard or unsafe practice that **could** result in death or injury.
⚠ **CAUTION**	Calls attention to a hazard or unsafe practice that could result in personal injury, product damage, or property damage.
NOTICE	Calls attention to a situation that could result in product or property damage.

Tip Calls attention to information that can help ease the installation or make better use of the Lift.

Liability Information

BendPak assumes **no** liability for damages resulting from:

- Use of the equipment for purposes other than those described in this manual.
- Modifications to the equipment without prior, written permission from BendPak.
- Injury or death caused by modifying, disabling, overriding, or removing safety features.
- Damage to the equipment from external influences.
- Incorrect operation of the equipment.

Components

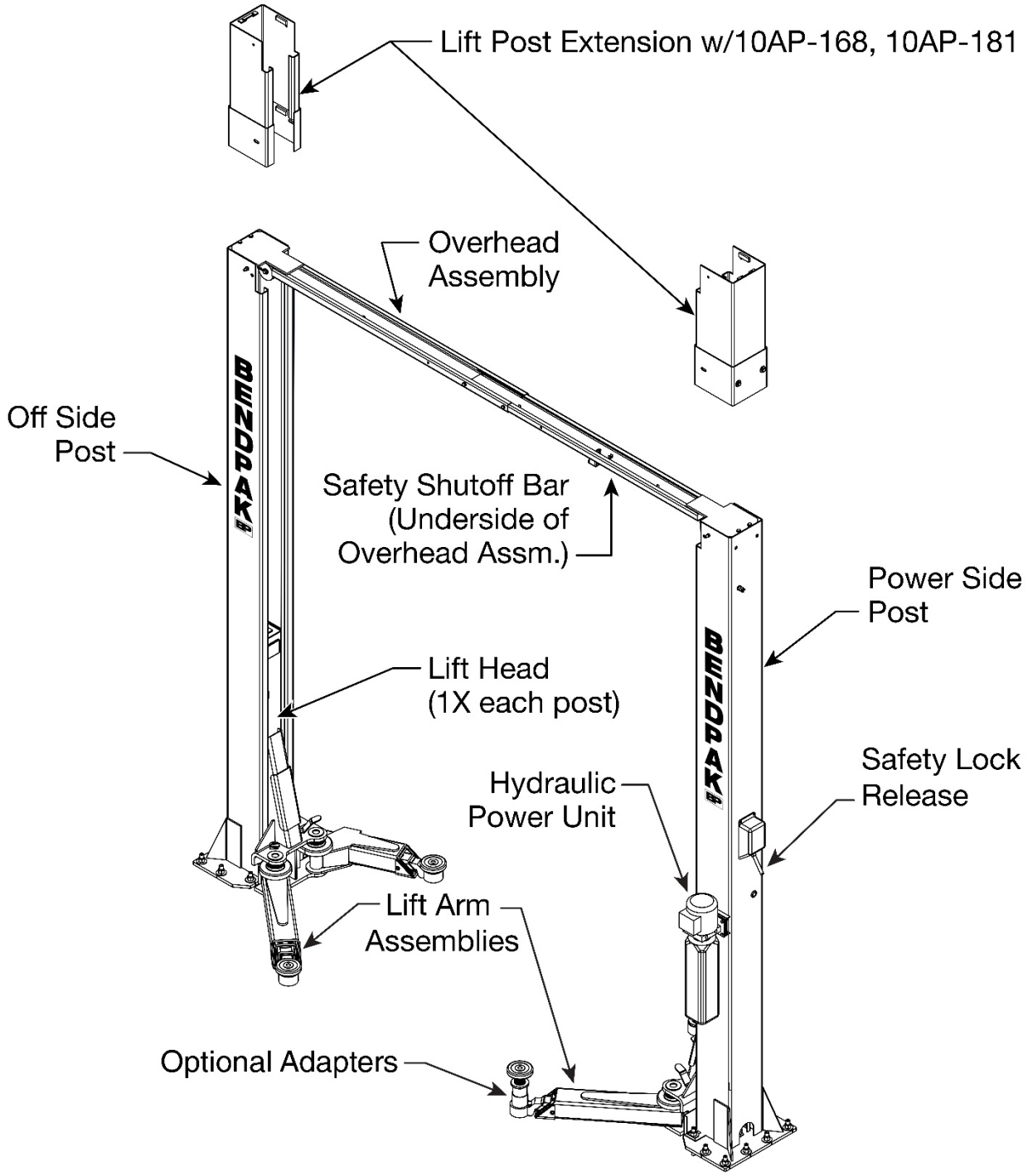
Lift Post Extension w/10AP-168, 10AP-181
Overhead Assembly
Off Side Post
Safety Shutoff Bar (Underside of Overhead Assm.)
Power Side Post
Lift Head (1X each post)
Safety Lock Release
Hydraulic Power Unit
Lift Arm Assemblies
Optional Adapters
BENDPAK
BENDPAK

Specifications

Top View

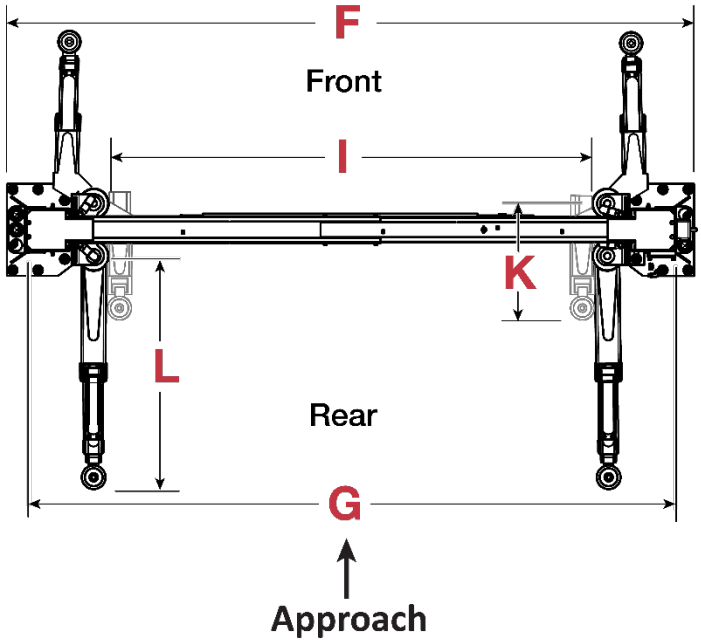

Approach View

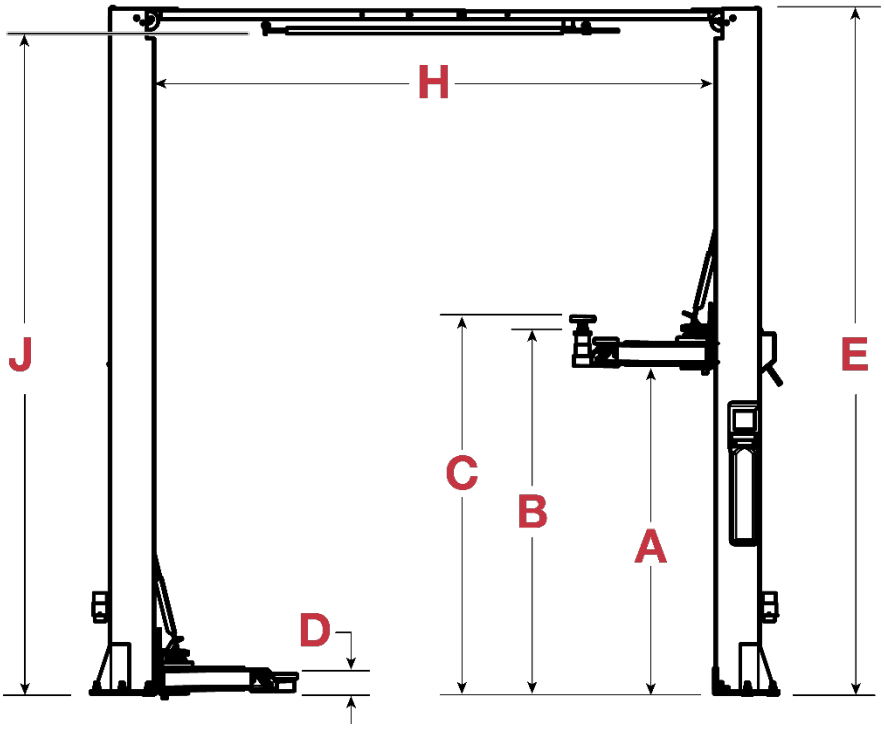

For reference only – do not scale. Shown with optional accessories.

Specifications

Model	**10AP**	**10AP-168**	**10APX**	**10APX-181**
Lifting Capacity	10,000 lbs. (4,536 kg)			
Max. Capacity — Front Axle	5,000 lbs. (2,268 kg)			
Max. Capacity — Rear Axle	5,000 lbs. (2,268 kg)			
Max. load per Lift Arm	2,500 lbs. (1,134 kg)			
A – Max. Rise	69 in. (1,753 mm)		75.5 in. (1,918 mm)	
B – Lifting Height w/ Pad1	73 in. (1,854 mm)		79.5 in. (2,007 mm)	
C – Max. Lifting Height1	82.5 in. (2,095 mm)		89 in. (2,261 mm)	
D – Min. Height w/ Pad	4 in. (102 mm)			
E – Overall Height	145 in. (3,683 mm)	168 in. (4,267 mm)	157 in. (3,988 mm)	181 in. (4,597 mm)
F – Width Overall (Narrow)	135 in. (3,431 mm)			
F – Width Overall (Wide)	145 in. (3,683 mm)			
G – Outside Posts (Narrow)	127.5 in. (3,238 mm)			
G – Outside Posts (Wide)	137.5 in. (3,492 mm)			
H – Inside Posts (Narrow)	108.5 in. (2,756 mm)			
H – Inside Posts (Wide)	118.5 in. (3,010 mm)			
I – Drive-Thru Width (Narrow)	92. in. (2,338 mm)			
I – Drive-Thru Width (Wide)	102 in. (2,592 mm)			
J – Floor to Top Switch	139.5 in. (3,540 mm)	163.5 in. (4,155 mm)	151.5 in. (3,850 mm)	175.75 in. (4,464 mm)
K – Front Arm Reach (min)	24.5 in. (622 mm)			
K – Front Arm Reach (max)	50 in. (1,270 mm)			
L – Rear Arm Reach (min)	32 in. (812 mm)			
L – Rear Arm Reach (max)	59.25 in. (1,504 mm)			
Screw Pad Adjustment	2 in. (51 mm)			
Operating Pressure at Max. Load	2,450 psi			
Time to Full Rise	≈ 63 seconds			
Motor Power Consumption Requirements (typical)[2]	208-240 VAC, 50/60 Hz., 1 Ph., 3 HP, ≈11 Amps			
Operating Temperature	41° to 104° F (5° to 40°C)			
Sound Pressure	81dB peak level			
Sound Pressure Measurement Operating Conditions	73° F (23°C), 67% Relative Humidity, 29.91 in. Hg. Air Pressure, Wind 2 mph 60 dB Background Noise Level			
Height and Distance of dB meter microphone	3 ft. (914 mm) high, 3 ft. (914 mm) distance			
Max. Noise Level measurement location	3 ft (914 mm) distance & 0° to Power Unit			
Noise Level Standard for measurement	IEC651 type 2, ANSI S1.4 type 2 complies with EN1493:2022			
Operating Mode	No load			
Declared Noise Emission Value	Single number determined directly from measurements *NO uncertainty* included.			
Noise Test Operating Conditions	23°C / Air pressure 29.91 in. Hg. / Wind 2 mph / humidity 67% / Air Quality Index 30			

[1]*Lifting Height w/Pad* is maximum lifting height with Pads adjusted to the lowest setting and no adapter(s). *Maximum Lifting Height* is maximum lifting height with Pads adjusted to high setting and with both tall and medium Adapters *(optional equipment)* installed.

[2]Special voltages available upon request.

[3]Lift Arms measured from the pivot center to the end of the Lift Arm.

Specifications subject to change without notice.

Installation Checklist

The following steps are required to install a 10AP Series Two-Post Lift:

- ☐ 1. Review the Safety Rules.
- ☐ 2. Make sure the required tools and supplies are available.
- ☐ 3. Site selection.
  - ☐ 4a. Verify the lift's orientation at the proposed site. Make a dry run with a vehicle to verify measurements.
  - ☐ 4b. Check clearances to the sides and above the proposed site.
  - ☐ 4c. Additional site considerations, concrete level and condition, architectural plans, access to electrical.
- ☐ 4. Create chalk line guides for the Lift Posts.
- ☐ 5. Remove the Lift Posts, Lift Arms, parts box, and parts bag from the shipping restraints.
- ☐ 6. Add the Post Extensions (10AP-168 & 10APX-181 models only).
- ☐ 7. Install and Anchor the Lift Posts.
- ☐ 8. Prepare and install the Overhead Assembly
  - ☐ 10c. Connect the wiring to the Limit Switch and route the cable down the Power Side Post.
- ☐ 9. Install or ensure Cylinder Clamps are secured.
- ☐ 10. Route, secure, and connect the Hydraulic Hoses.
- ☐ 11. Route and secure the equalizing cables to the lift heads.
- ☐ 12. Install and secure the double threaded Rods at the top of both Lift Posts.
- ☐ 13. Route, connect, and test the Safety Lock Cable for proper functioning.
- ☐ 14. Mount the Power Unit on the Power Side Post and fill with hydraulic fluid.
- ☐ 15. Install the Lift Arm Assemblies.
  - ☐ 15a. Install the Foot Guards (CE approved units only)
- ☐ 16. Shim and level the Posts and Lift Arms.
- ☐ 17. Electrical connections (electrician required).
  - ☐ 17a. Install a Power Disconnect.
  - ☐ 17b. Install a Thermal Disconnect (if required).
  - ☐ 17c. Make the Limit Switch connections in the Power Unit Junction Box.
  - ☐ 17d. Connect to facility power.
- ☐ 18. Ensure all anchors and fasteners are secure.
- ☐ 19. Ensure all hydraulic connections are secure.
- ☐ 20. Lubricate the Lift.
- ☐ 21. Perform an Operational Test.
- ☐ 22. Review the Final Checklist.
- ☐ 23. Leave the Manual at the Lift for the owner/operator.

Installation

The installation process includes multiple steps. Perform them in the order listed in this manual.

⚠ **WARNING** Use only the factory-supplied parts shipped with the 10AP Lift. Using attachments, accessories, or modifying components that are in the path of and/or affect the operation of the equipment, affect the equipment's electrical listing, or affect the intended vehicle accommodation, and are not certified for use with this Lift, void the warranty of the Lift as well as compromise the safety of everyone who sets up or uses the Lift. If parts are missing, visit **BendPak.com/Support**, email **support@bendpak.com** or contact BendPak technical support by phone at **(800) 253-2363**. Follow the prompts to reach sales.
Online chat is also available at **www.bendpak.com**. Click the chat icon.

Reviewing the Safety Rules

When installing a Lift, operator safety depends on proper training and thoughtful operation. BendPak recommends referring to the ANSI/ALI ALIS Standard *Safety Requirements for Installation and Service* for more information about safely installing, using, and servicing the Lift.

⚠ **WARNING** Do not allow the installation of this equipment unless the installer has automotive lift installation training. Always use proper lifting tools, such as a forklift or shop crane, to raise heavy components. Do not install this equipment without first reading and understanding this manual and all of the labels on the Lift.

⚠ **WARNING** Appropriate protective equipment must always be worn during installation, including leather gloves, steel-toed work boots, eye protection, back belts, and hearing protection.

Tools and Supplies

- Rotary hammer drill (or similar)
- 3/4 in. carbide drill bit (conforming to ANSI B212.15)
- Hammer
- Four-foot level
- Open-end wrench set, SAE, and metric
- Socket and ratchet set, SAE, and metric
- Hex-key wrench set
- Crescent and pipe wrenches
- White and red lithium grease
- 90-WT gear oil or ALMASOL® Wire Rope Lubricant
- Crowbar
- Chalk line
- Medium-sized flat screwdriver
- Tape measure, 25 ft. (7.6 m) or more
- Needle-nose pliers
- Forklift or shop crane
- Two 12 ft. (3.7 m) ladders
- Two sawhorses
- Torque wrench
- Removable thread lock compound (Loctite® 242 or equivalent)
- Hydraulic Fluid ≈3.5 gallons (13 Liters)

Preparing for Electrical Work

A licensed electrician will be required at some point during the installation.

⚠ DANGER All wiring ***must*** be performed by a licensed electrician in accordance with applicable local, state, and federal electrical codes, rules, and regulations, such as state and federal OSHA regulations and electrical codes. There are numerous variations in electrical wiring, local codes, and dangerous errors are often made that cannot be covered in this manual. Avoiding these problems requires the proper equipment and training that a licensed electrician provides.

NOTICE Notify the electrician in advance so they arrive prepared with the items required to connect to the facility's power system, or an appropriate power cord with plug to connect to an appropriate VAC power source, a Power Disconnect Switch, and a Thermal Disconnect Switch, if required by the local electrical code. ***These items are not supplied with the Lift***.

The electrician needs to:

- **Connect to the facilities power source**. The Power Unit is delivered with a pigtail for wiring to a power source. Have the electrician connect a power cord with plug to the electrical box on the Lift for connection to a power outlet, or have them wire it directly into the electrical system at the Lift location. The Lift's Power Unit must be protected by an appropriate circuit breaker.
- **Connect the Limit Switch wiring to the Power Unit**. The Limit Switch must be wired to the Power Unit. The required wiring is included with the Lift.
- **Install a Power Disconnect Switch**. A Power Disconnect Switch is used to shut down the Lift in the event of an electrical circuit fault, emergency, or when the Lift is being serviced. Refer to **Installing a Power Disconnect Switch** for more information.
- **Install a Thermal Disconnect Switch, if required by local electrical codes**. Refer to **Installing a Thermal Disconnect Switch** for more information.

Site Selection

Reviewing the Installation Orientation

Keep these factors in mind when deciding how to orient the Lift:

- The direction from which vehicles drive into the Lift is called the **Approach**.
  - In most cases a driveway is on one side of the Lift and a wall on the other. The driveway is the approach. The wall side is the front of the Lift and the driveway side the rear of the Lift.
  - If both sides are open, decide which way vehicles will primarily be driven onto the Lift. This is the Approach. The drive-**on** side is the rear of the Lift and the drive-**off** side if the front.
- While the Power Unit ***must*** be installed on the power side post, that power side post may be mounted on either side of the Lift. The Power Side Post can be identified by the Mounting Bracket to which the Power Unit is attached. Refer to the illustrations below.
- It is advisable to sketch the Lift outline in chalk on the floor and make a dry run with a typical vehicle to verify the location is suitable.

Top View
Approach Side

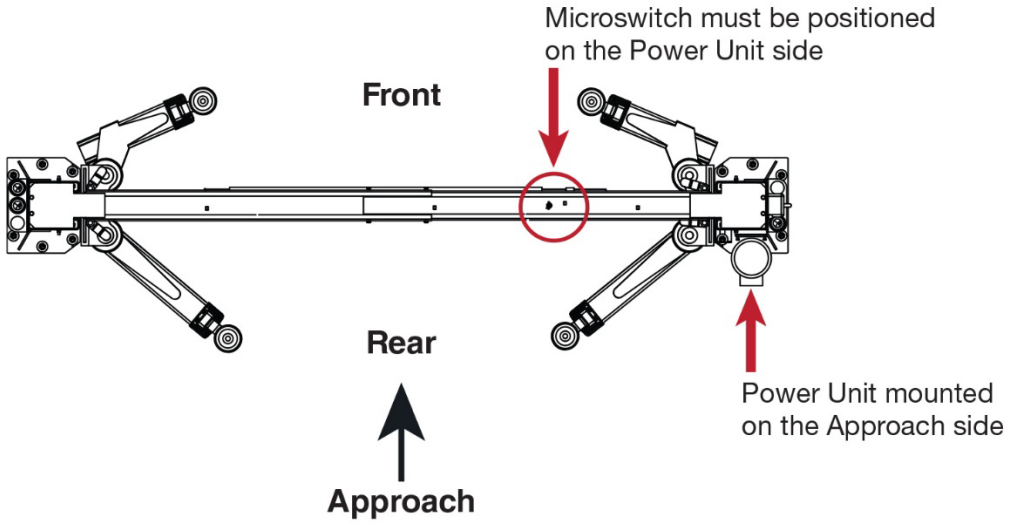

Top View
Opposite
Approach

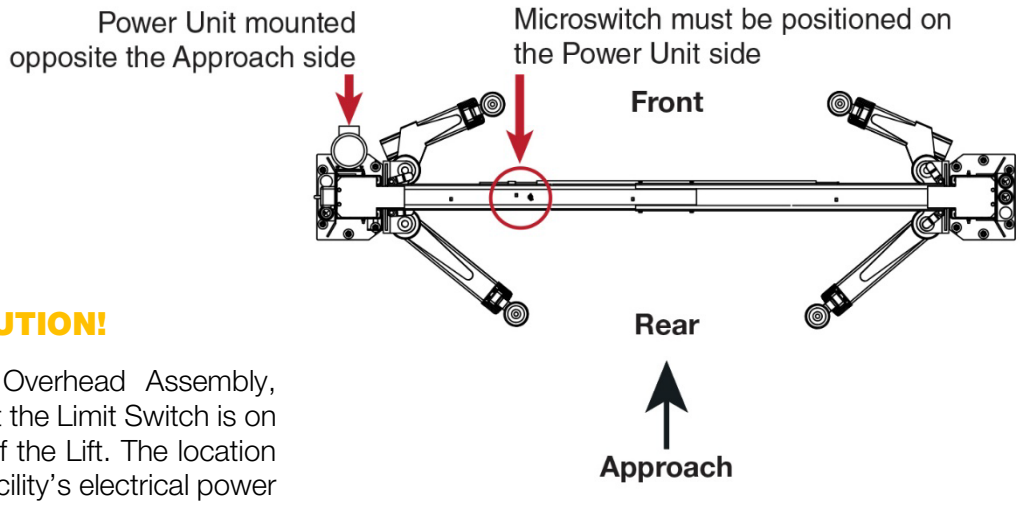

⚠ CAUTION!

When installing the Overhead Assembly, always orient it so that the Limit Switch is on the Power Unit side of the Lift. The location and distance to the facility's electrical power supply may also affect the positioning of the Lift.

Checking Clearances

Clearance around and above the Lift is required for safety. Provide adequate clearance around the lift to ensure safe operation, vehicle positioning, and service access. Surrounding equipment, walls, and structural elements should be arranged to allow free and unobstructed movement of personnel, vehicles, and service equipment such as oil drains, tool carts, and other shop apparatus through adjacent work areas and access lanes. Auxiliary and utility services should be routed so they do not interfere with lift operation or prevent removal of access covers or service panels. For proper anchor performance, position the lift no closer than 6 in. (150 mm) from any foundation expansion joint, control joint, or edge of the concrete slab. Refer to the figure below.

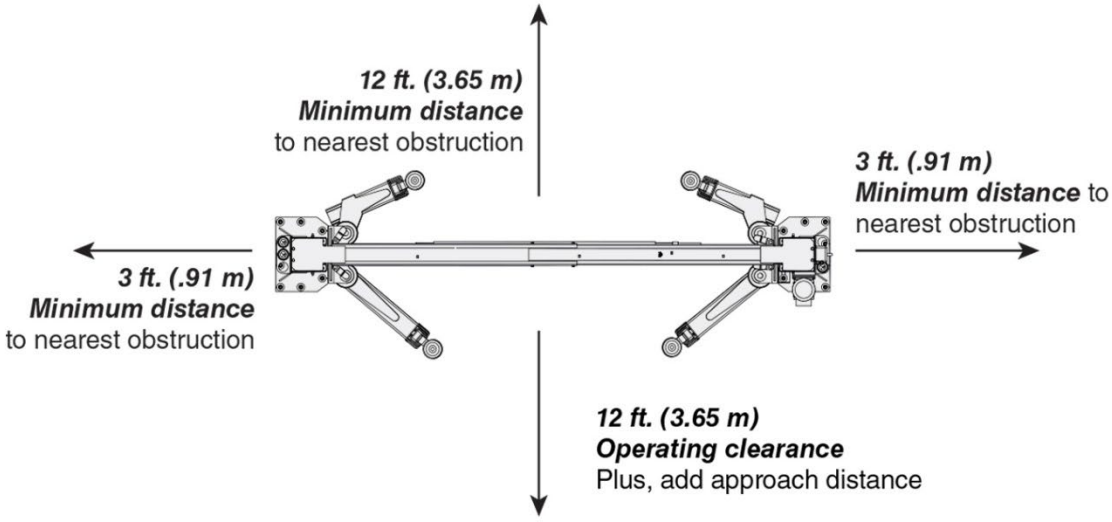

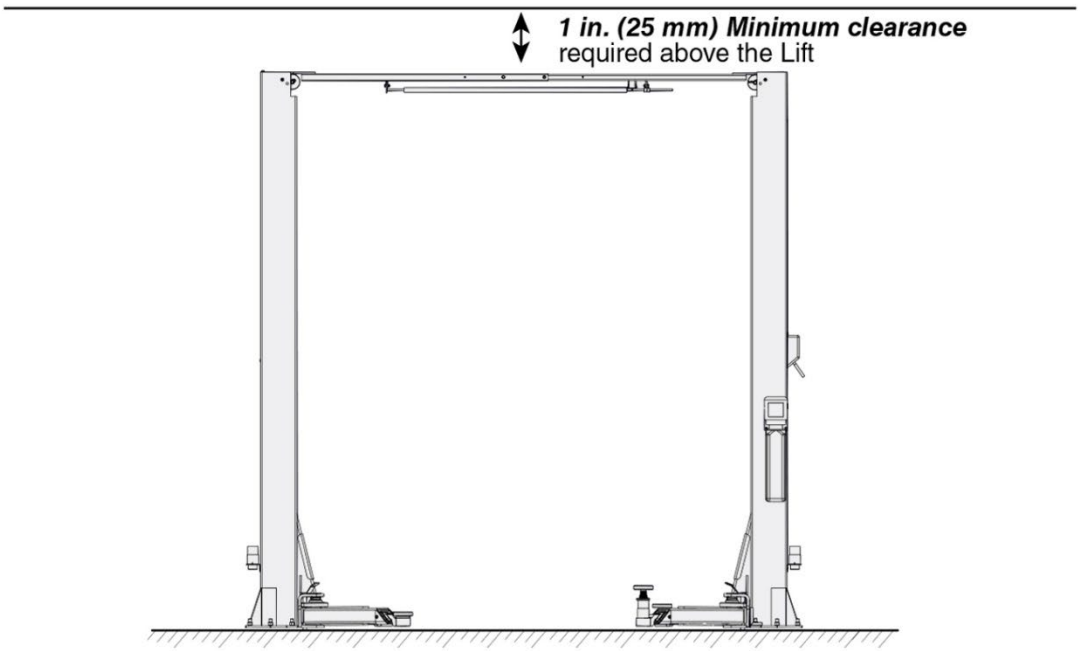

Illustration not to scale. The Lift is shown with optional accessories. Additional distance may be required at the front and rear, to allow vehicles to be driven in or out from these directions.

Additional Site Considerations

When selecting the location for the Lift, consider the following:

- **Architectural plans**. Consult the architectural plans for the desired location. Ensure there are no structural or regulatory barriers to installing the lift.
- **Power**. The site must have access to an appropriate electrical power source for the Lift.
- **Outdoor installations**.10AP Series Two-Post Lifts are approved for indoor installation and use only. ***Outdoor installation is prohibited.***
- **Level Floor**. Only install the Lift on a flat, level, steel reinforced concrete floor. Do not install on asphalt or any other surface. **The surface must be level**; **do not install the Lift if the surface has a slope of 3° or more**.

⚠ **DANGER** Installing the 10AP Lift on a surface with more than three degrees of slope could lead to injury or even death. Only install the Lift on a level floor (defined as no more than 3/8 in. (9.5 mm) difference over the installation area). If the floor is not level, it should be made level or a different location used.

⚠ **DANGER** **Risk of explosion**: This equipment has internal arcing, or parts that may spark, and should not be exposed to flammable vapors. The Power Unit's motor should not be located in a recessed area or below floor level. Mount the motor at least 18 in. (457 mm) above the floor. Never expose the motor to rain or other damp environments. damage to the motor caused by water is not covered by the warranty.

- **Concrete specifications**. The concrete must be steel reinforced, a minimum 4.25 in. (108 mm) thick, 3,000 PSI minimum compressive strength, and cured for a minimum of 28 days. Do not install the Lift on cracked or defective concrete. Anchor Bolts must be more than 6 in. (152 mm) from cracks and expansion joints in the concrete or from a wall.

⚠ **CAUTION** BendPak Lifts are supplied with installation instructions and concrete anchors that meet the criteria set by the latest version of the American National Standard in Automotive Lifts – Safety Requirements for Construction, Testing, and Validation in., ANSI/ALI ALCTV. Consult with an expert for any special regional structural and/or seismic anchoring requirements specified by any other agencies and/or codes such as the Uniform Building Code (UBC) and/or International Building Code (IBC).

Verify that the floor is not a post-tension slab. If the floor is suspected of being post-tensioned, contact the building architect or the local department of building and safety ***before*** drilling. Ground penetrating radar may assist locating post-tensioned steel.

⚠ **DANGER** Cutting through a tensioned cable can result in injury or death. Do not drill into a post-tension slab unless the building architect confirms that tensioned steel will not be hit, or it has been located using ground penetrating radar. ***If colored sheath comes up while drilling, stop drilling immediately!***

Creating Chalk Line Guides

Based on the specifications for the Lift model, create chalk line guides on the ground for the two Lift Posts prior to moving them into position.

Use the **width overall** value found in **Specifications** for the Lift model to determine where to place the chalk line guides. The overall width value is defined as the distance from the back of one base plate to the back of the opposite base plate. The overall width setting may be set to narrow 135 in. (3,431 mm) or wide 145 in. (3,683 mm) on 10AP Series Lifts.

The illustration below depicts chalk line guides for 10AP Series Lifts.

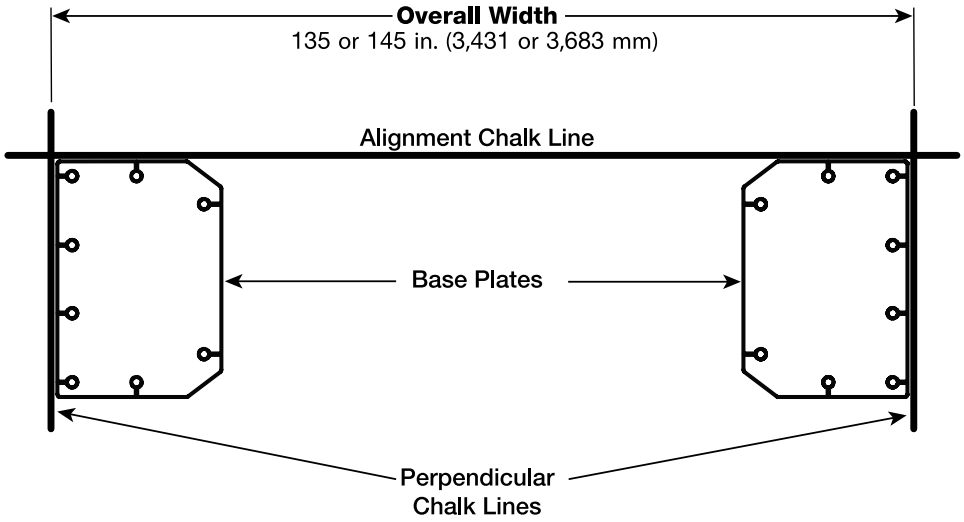

Top view of the Base Plates. Components removed for clarity.

Make sure to choose the **width overall** value for the **narrow** or **wide** configuration, based on the selection made previously.

Adding Chalk Line Guides:

1. Verify the clearances around the proposed Lift area.
2. Create an Alignment Chalk Line at the Front of the Lift.

   Make the Alignment Chalk Line longer than the **width overall** setting for the Lift model.
3. Create two perpendicular chalk Lines at 90° angles to the Alignment Chalk Lines at the **width overall** distance for the Lift model being installed.

   The two Perpendicular Chalk Lines must be a specified distance from each other, the **width overall** setting for **narrow: 135 in. (3,431 mm)** or **wide: 145 in. (3,683 mm)**, depending on the Lift model.
4. When moving the Lift Posts into position, place the base plate corners into the corners created by the Chalk Line Guides, as shown in the illustration above.

Unloading the Lift Components

Unload the Lift components as close to the installation location as possible.

⚠ **WARNING** Some Lift components are very heavy, and if handled incorrectly they can cause damage to floors, walls or nearby objects. A forklift or shop crane is required. Try to handle the Lift components only twice; once when delivered and once when moved into final position. Installation should only be performed by competent personnel who have knowledge, training, and experience in lifting, rigging, and securing heavy objects.

Configure the Equalizing Cables Wide or Narrow

10AP Series Two-Post Lifts may be installed in a wide or narrow Configuration. The Equalizing cables must be set top reflect this configuration.

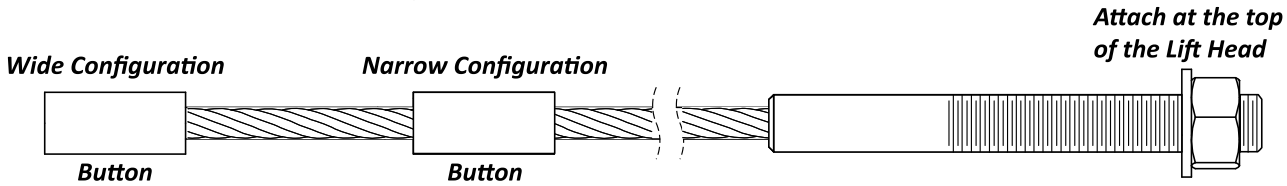

Wide Configuration. The 10AP Equalizing Cables are delivered installed in the wide configuration. The Lift Posts are further apart in this configuration, which allows wider vehicles on the Lift.

Narrow Configuration. If the narrow configuration is desired, the equalizing cables must be adjusted to use the narrow configuration button on each Equalizing Cable. The illustrations below and on the following page display an Equalizing Cable and its attachment inside the Lift Head. The Lift Post and Lift Head have been removed for clarity.

To Configure the Equalizing Cable for Narrow Installations:

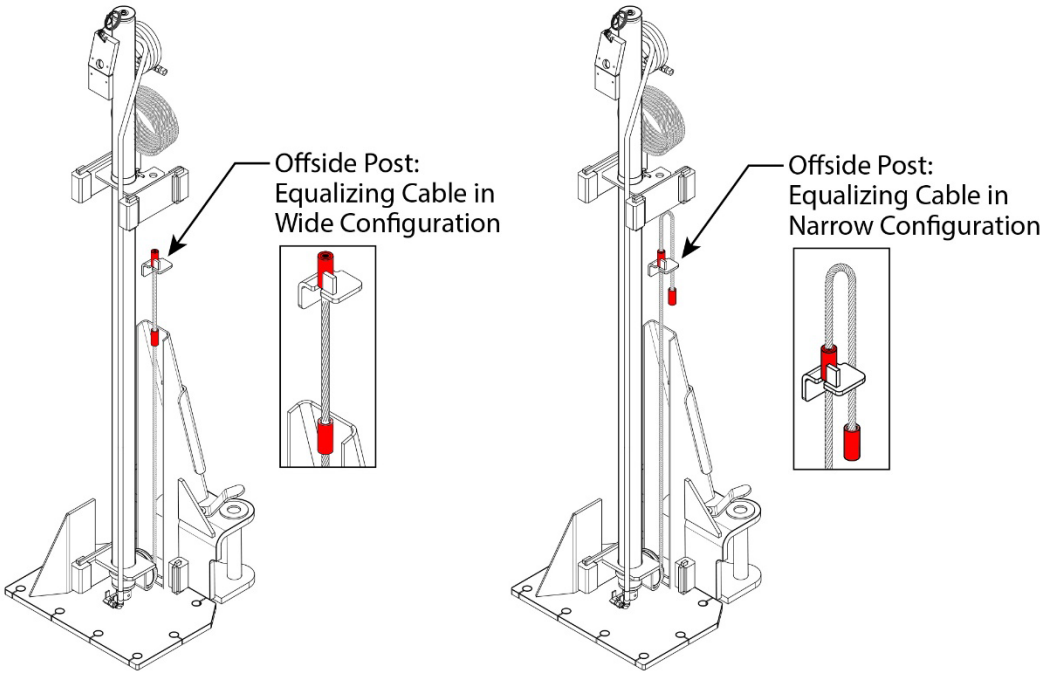

Some components removed for clarity.

NOTICE! The two Equalizing Cables are the same length. For a narrow configuration, both cables must be locked into their respective Lift Heads on the ***Narrow Cable Button***.

⚠ **CAUTION** BendPak recommends wearing safety gloves when handling the Equalizing Cables.

To change the Equalizing Cable Button to a Narrow Configuration:

1. Lay the Posts on the ground or on sawhorses so that the open side of the column is facing up.
2. Move the Equalizing Cable to provide slack inside the Lift Head.
3. Move the Cable Button out of its Cable Stop Weldment inside the Lift Head. A long metal rod may be required to guide the button out of its Cable Stop.
4. Push more cable into the lift head and bend or guide the excess cable to provide room for the Narrow Button to move into the Cable Stop.
5. The following graphic provides an overview of the Equalizer Cable routed into position on the Power Side Lift Post.
6. Repeat steps 1 through 5 on the Offside Post.

NOTICE! Both Equalizing Cables ***must*** have their Narrow Configuration Button locked into the Cable Stop inside each Lift Head.

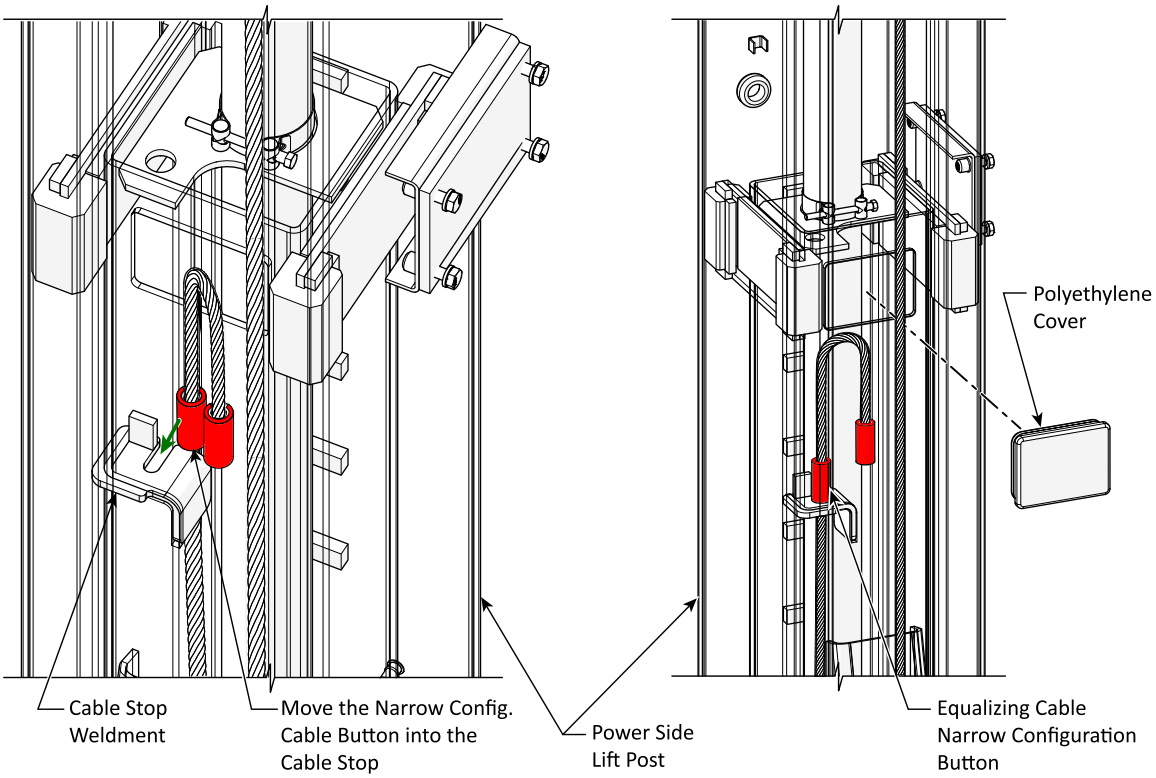

Components removed for clarity.

Install the Lift Post Extensions

10AP-168 and 10APX-181 are supplied with Post Extensions that raise the height of the Posts and allow service on taller vehicles.

The Post Extensions are slipped over the top of both Posts and then bolted into place.

To install the Post Extensions:

1. Locate the two Post Extensions and the 4 Hex Head Bolts, 8 Flat Washers, 4 Split-Lock Washers, and 4 Nuts. Reference the illustration below for part numbers.
2. Slide one of the Post Extensions over the top of one of the Posts.

   The opening in the Post Extension faces the inside of the Lift.
3. Secure the Post Extension to the Lift Post, using the hardware listed in the illustration above.
4. Slide on the other Post Extension to the other Lift Post and secure it the same way.

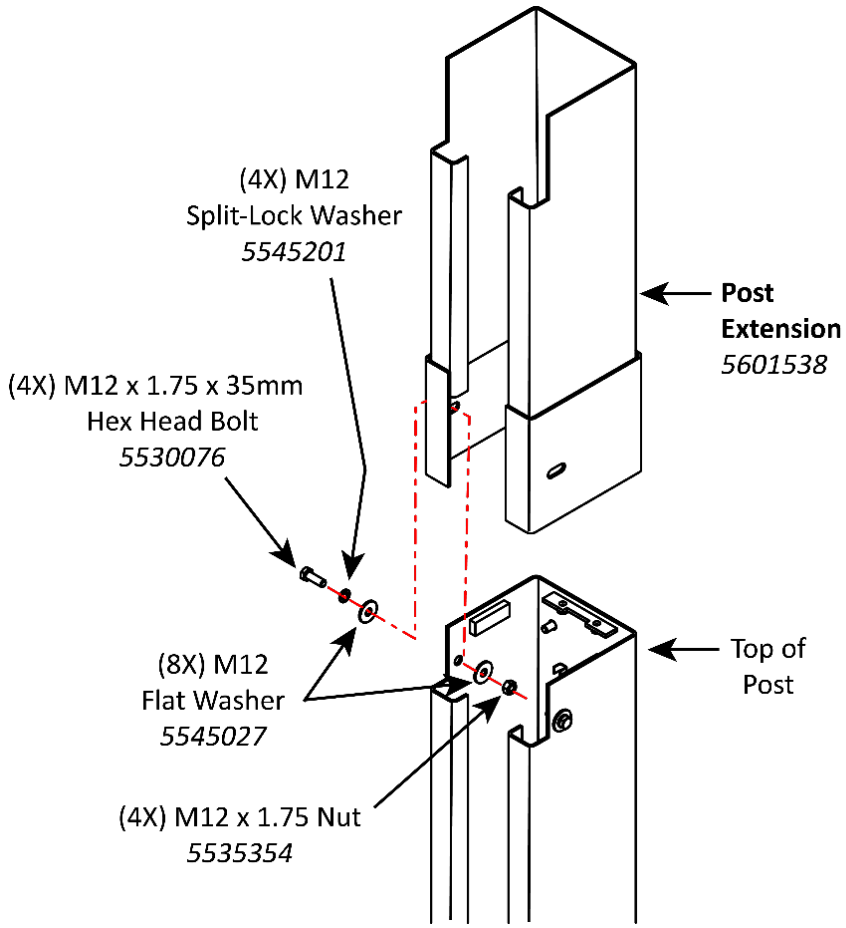

Install and Anchor the Lift Posts

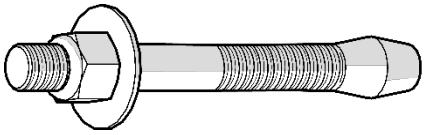

(16X) Anchor Bolt Assembly
5530337

⚠ **DANGER** *Pay special attention when installing the Posts. If done incorrectly, the Lift could fall over, potentially causing damage to the vehicle, the Lift, and injuring bystanders. BendPak strongly recommends consulting a Concrete Specialist early in the planning process for Lift installations. A Concrete Specialist will make adjustments to account for national, state, and local building codes as well as local weather conditions, soil composition, base preparation, load bearing, seismic requirements and any other structural concerns that may arise.*

Concrete specifications:

- **Depth**: 4.25 in. (108 mm) thick, minimum, steel reinforced.
- **PSI**: 3,000 PSI, minimum
- **Cured**: 28 days, minimum

Anchor Bolt specifications:

- **Length**: 6.3 in. (160 mm)
- **Diameter**: .75 in. (19 mm)
- **Anchor torque**: 85 – 95 ft. lb.
- **Effective embedment**: 3.25 in. (82.5 mm) or more

The Concrete floor where the Lift is being installed must meet the following requirements:

- The floor must be flat, level concrete. ***Do not install the Lift on a surface with more than three degrees of slope***.
- Do not install the Lift on cracked or defective Concrete.
- Verify the floor is not a post-tension slab. If the floor is suspected of being post tensioned, contact the building architect ***before*** drilling. Contact a qualified professional to locate the tensioned cables before drilling.

⚠ **WARNING** Cutting through a tensioned cable can result in injury or death. Do not drill into a post-tension slab unless the building architect confirms that any tensioned cable will not be hit, or that it has been located using ground penetrating radar. ***If colored sheath comes up during drilling, stop drilling immediately***.

⚠ **DANGER** The concrete and Anchor Bolts ***must*** meet the specifications described above. Only install the Lift on a Concrete surface. Installing a Lift on asphalt or any other surface, or the Concrete or Anchor Bolts do not meet these specifications, could lead to product or vehicle damage, personal injury, or even loss of life.

BendPak Lifts are supplied with installation instructions and concrete fasteners meeting the criteria as prescribed by the latest version of the American National Standard “Automotive Lifts – Safety Requirements for Construction, Testing, and Validation.”

⚠ **WARNING** Use ***only*** the ALI-certified Anchor Bolts that came with the Lift. Using components from a different source voids the warranty and compromise the safety of everyone who installs or uses the Lift.

Lift buyers are responsible for conforming to all regional, structural, and seismic anchoring requirements specified by any other agencies and/or codes, such as the Uniform Building Code and/or International Building Code.

NOTICE Consider ***not*** torquing the Anchor Bolts into position yet. Installing the Overhead Assembly and doing final leveling may be easier if there is some play in the Posts.

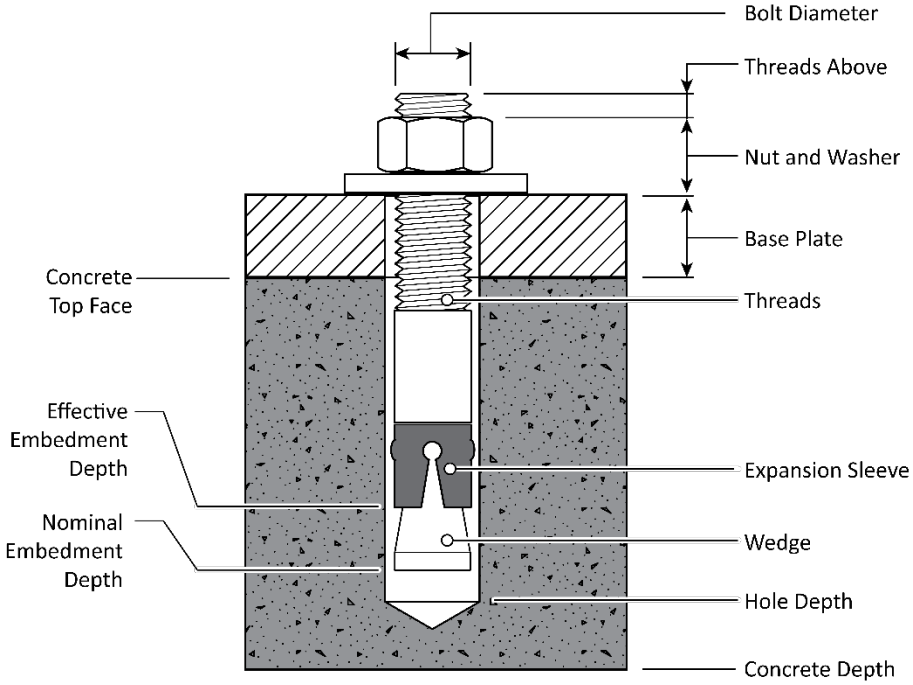

Effective Embedment is the location in a drilled hole where the Expansion Sleeve presses into the Concrete. This is where the Anchor Bolts get their holding strength. The further down into the hole, the greater the holding strength.

Nominal Embedment is the distance from the floor surface to the bottom tip of an anchor prior to tightening.

To install and anchor the Lift Posts:

1. Using a forklift or shop crane, move the Posts to the Chalk Line Guides created earlier.

2. Carefully stand up each Post, *one at a time*, and move them to the Chalk Lines.

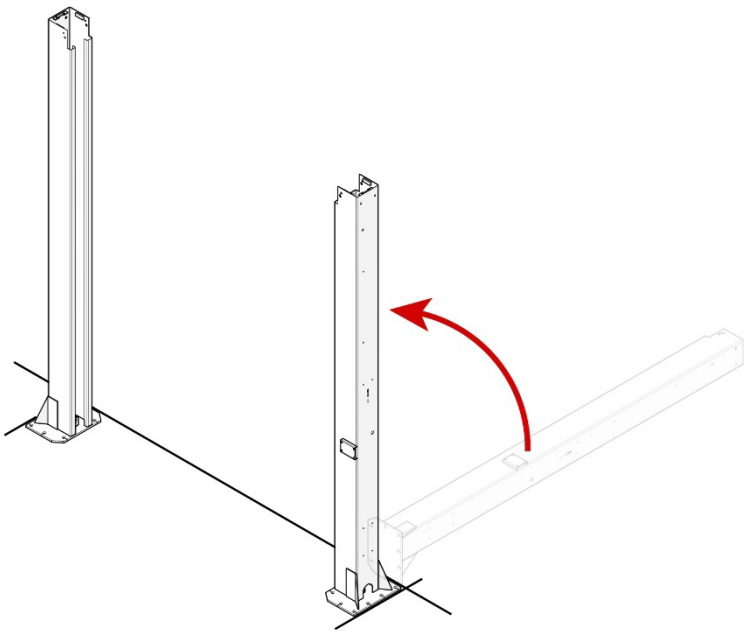

3. Double check all measurements against the **Specifications** for the specific Lift model.

⚠ WARNING All installers ***must*** use the appropriate safety gear, including safety glasses, dust masks, gloves, steel-toed work boots, and heavy work clothes when anchoring the Posts.

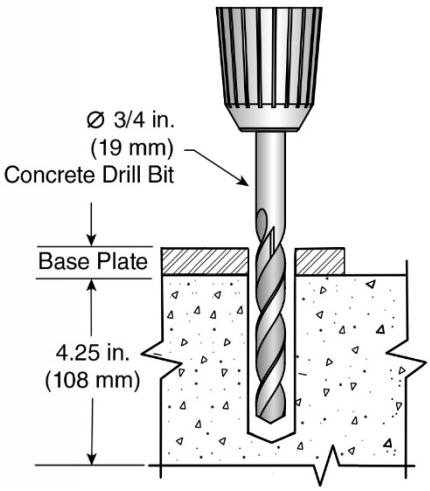

4. Using the Base Plates as guides, drill each hole **4 in. (102 mm)** deep using a carbide bit.

   Drill straight. Do not let the drill wobble.

   The diameter of the drill bit must be the same as the diameter of the Anchor Bolt. When using a ¾ in. diameter Anchor Bolt, for example, use a ¾ in. diameter drill bit.

   Do not drill all the way through the Concrete as this could compromise the holding strength of the Anchor Bolts.

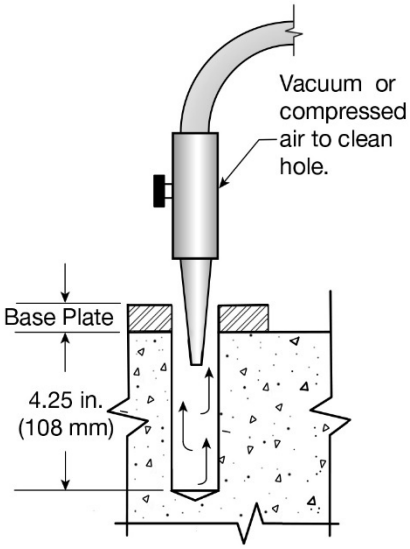

5. Using a vacuum, clean the hole thoroughly of all debris.

   A wire brush, hand pump, or compressed air may also be used. ***Make sure to thoroughly clean each hole***.

   Do ***not*** ream the hole or make it any wider than the drill bit made it.

   NOTICE The holding strength of an Anchor Bolt is partially based on the how cleanly the Expansion Sleeve presses against the Concrete. If the hole is dirty or too wide, there is less holding strength.

6. Make sure the Washer and Nut are in place, then insert the Anchor Bolt into the hole.

   The Expansion Sleeve of the Anchor Bolt may prevent the Anchor Bolt from passing through the hole in the Base Plate; this is normal. Use a hammer or mallet to get the Expansion Sleeve through the Base Plate and into the hole.

   Even using a hammer or mallet, the Anchor Bolt should only go into the hole part of the way. This is normal. If the Anchor Bolt goes all the way in with little or no resistance, the hole is too wide.

   Once past the hole in the base plate, the anchor bolt will eventually stop as the expansion sleeve contacts the sides of the hole. This is normal.

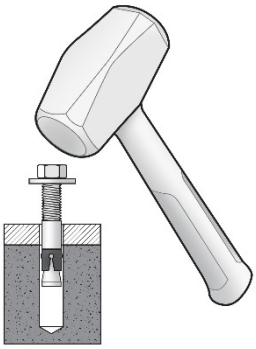

7. Hammer or mallet the anchor bolt the rest of the way down into the hole and stop when the washer is snug against the Base Plate.

8. Plumb each Post by installing Shims as required. See **Troubleshooting Lift Arm Lock Disengagement** If shimming greater than .5 in (13 mm).

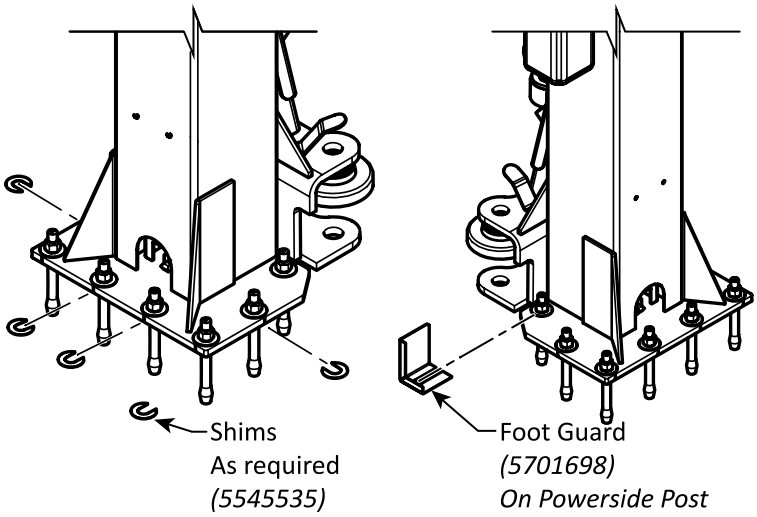

9. Tighten each Nut ***clockwise*** to the recommended installation torque, 85-95 lb. ft., using a torque wrench.

Tip If torquing the Anchor Bolts later in the process is planned, so that installing the Overhead Assembly and final leveling is easier, skip to the next step. Make sure the Anchor Bolts are securely in position; This will ensure that the Posts will not move too much during the rest of the installation.

CAUTION Do ***not*** use an impact wrench to torque the Anchor Bolts as this can cause damage to the concrete.

10. Install the Foot Guard on the power side post as shown below.

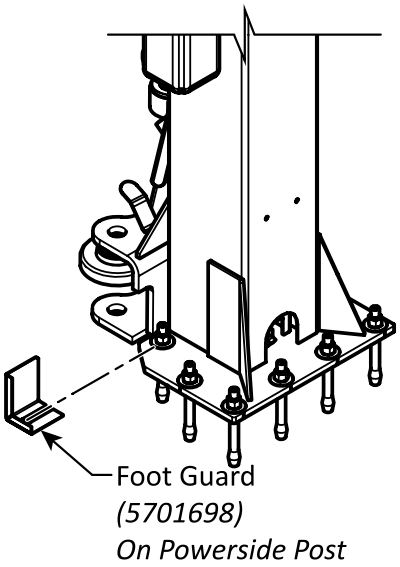

Configure and Install the Overhead Assembly (Top Trough)

The Overhead Assembly is installed above and between the Power Side and Offside Posts. It supports the Equalizing Cables, the Hydraulic Hoses, the Limit Switch wiring, and the Safety Lock Cable.

The Overhead Assembly is delivered in two sections that are bolted together with four M10 Hex Head Bolts, Washers and Nyloc Hex Nuts.

NOTICE BendPak recommends placing the Overhead Assembly on sawhorses or a workbench to configure the assembly.

The illustration below details the bolting locations for both Narrow and Wide Configurations.

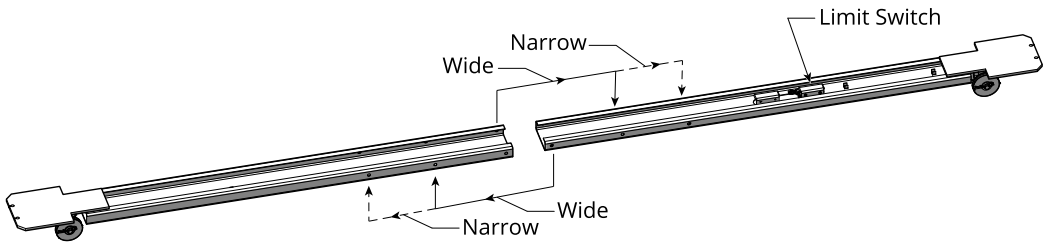

Configure and Install the Overhead Assembly:

1. Locate the two Overhead Assembly sections and the four M10 Hex-Head Bolts, Flat Washers, and Nyloc Nuts required to connect them.

2. Secure the Overhead Assembly together in the desired width using the fasteners as listed in the illustration below.

Important: *Mount the M10 Hex Bolt Heads and Flat Washers **inside** the Overhead, Nyloc Nuts outside.*

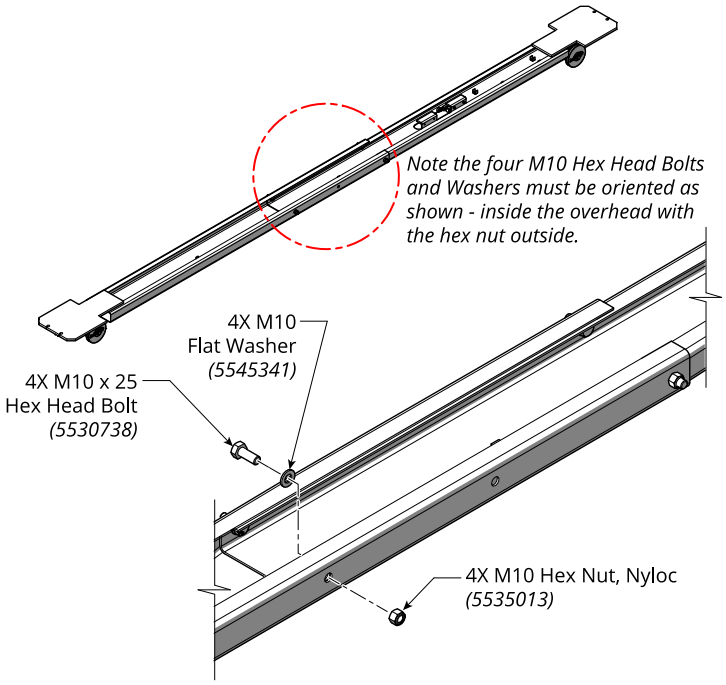

3. Attach the Safety Shutoff Bar to the Overhead Assembly using the provided Nut and Washer. **Do not overtighten** the Nut, as the Safety Shutoff Bar should move freely within the slot.

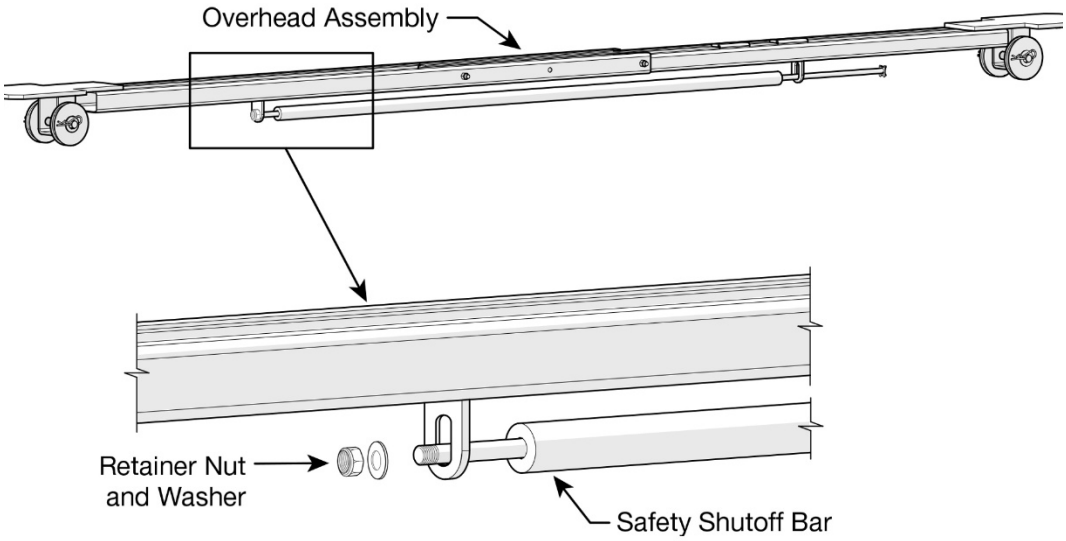

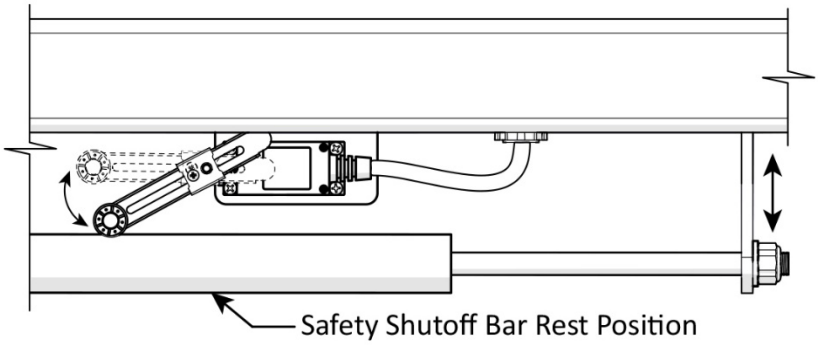

Wiring the Limit Switch

The following procedure describes how to connect the Limit Switch to the 14-2 cable supplied with the 10AP Series Lift. This procedure covers only the limit switch side of the cable. The Power Unit end of the cable must be connected by a licensed electrician. The Limit Switch ***wiring*** is routed over the Overhead Assembly and down the inside of the Power Side Post to the Power Unit. Refer to the illustration on the next page

If ***two*** Limit Switches are provided, a three-phase Power Unit is being supplied.

1. Locate the Limit Switch and remove it and its fasteners from the Overhead Assembly. Set the fasteners aside, they will be used to reinstall the Limit Switch.
2. Remove the switch cover (3 small Phillips machine screws).

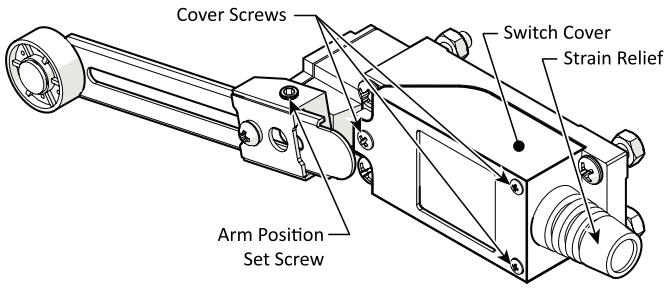

3. Retrieve the 14-2 Cable (5520032) from the parts box. Carefully strip back the cable cover to expose the two wires. Feed the two wires through the strain relief and cover.
4. Strip back the insulation from the two wires to expose the copper and connect to the terminals 21 and 22 as shown in the diagram below.

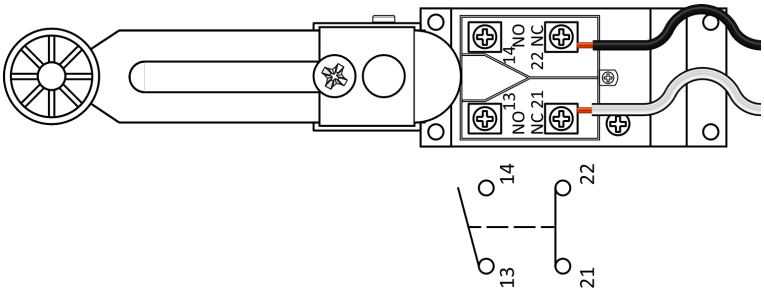

5. Replace the Limit Switch Cover and secure with the three screws.
6. Install the Limit Switch back on the Limit Switch Bracket.
7. Position the switch arm so that the Safety Shutoff Bar, when moved upwards, will contact the Limit Switch Arm to stop the lift's upward movement.

   For Three-Phase Installations see **Three-Phase Limit Switch Installation**.

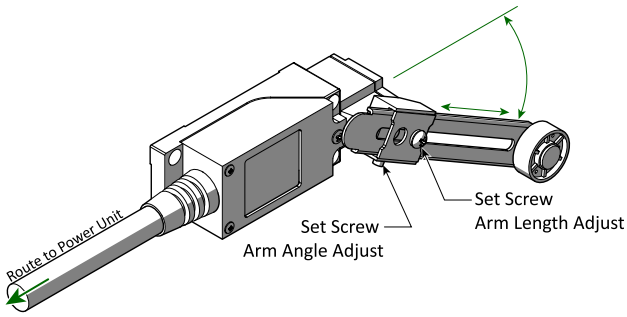

8. Loosen the Arm Rotation Set Screw and rotate the Arm downwards until it contacts the Safety Shutoff Bar in its rest position. If necessary, adjust the arm length by loosening the Arm Length Set Screw. The Limit Switch should be free to travel and follow the Safety Shutoff Bar as it moves up and down. Refer to the illustrations below.
9. Use the supplied hardware to secure the Limit Switch and Limit Switch Cover in place.
10. Use an appropriate lifting device to put the Overhead Assembly into position, ***making sure to position the Limit Switch Bracket on the same side as the Power Side Post***.
11. Bolt the Overhead Assembly to the top of the Posts using two M10 Bolts and Lock Washers on each end.

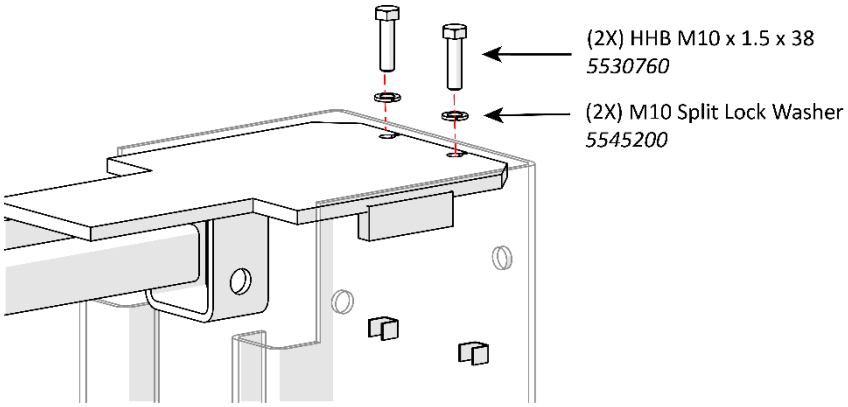

12. Route the limit switch wiring as shown on the next page and secure the cable with the clips on the overhead and inside the power side post.

The Limit Switch Cable exits the Power Side Lift Post below the Safety Release through a cable grommet and is routed to the Power Unit.

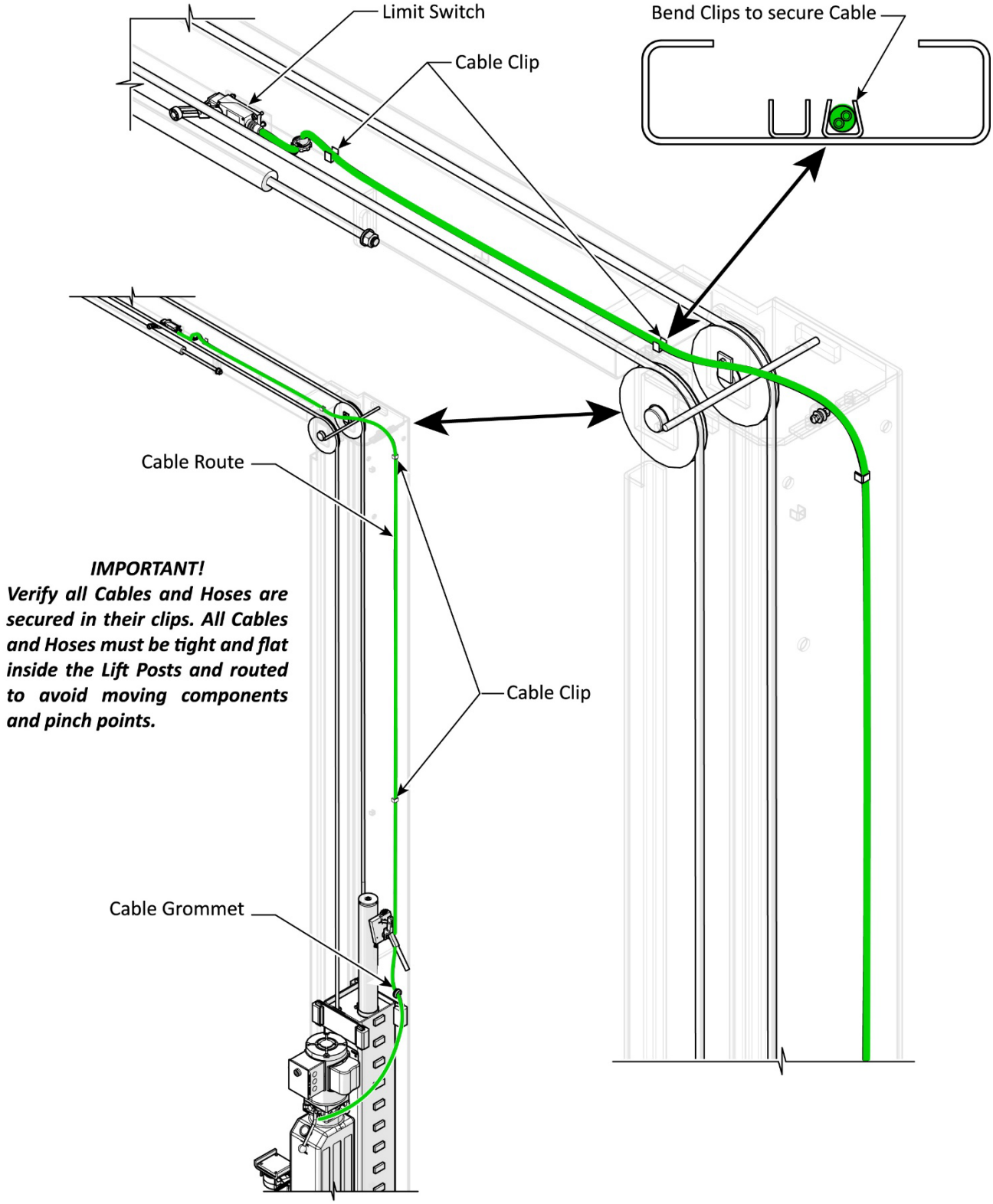

Install the Cylinder Clamps

⚠ **WARNING** Verify the cylinder clamps are positioned on ***both*** lift cylinders at the top of the lift head and secured. ***Do not operate the lift if the cylinder clamps are not secured on the hydraulic cylinders***.

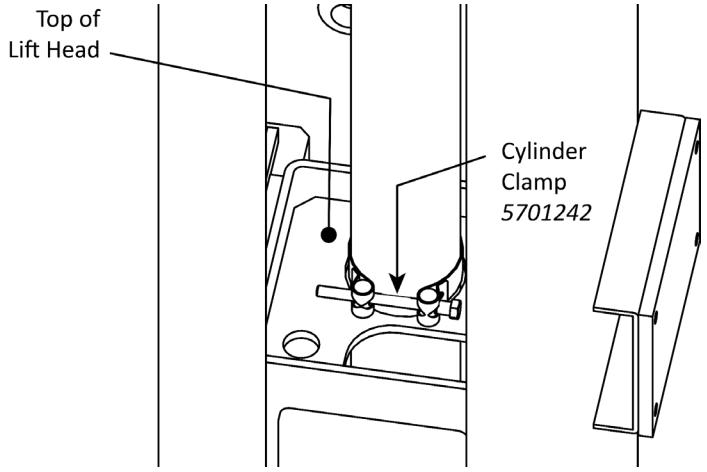

Illustration for reference only – do not scale.

Hydraulic Fluid Contamination poses a serious issue for service lifts. Contaminants such as water, dirt, or other debris can migrate into the hydraulic system, making the Lift inoperable.

This Lift is shipped with clean components; however, BendPak strongly recommends taking secondary precautions to clean all Hydraulic Hoses and Fittings prior to making connections. It is better and less costly to take these extra steps now so there is no need to take the Lift out of service later to repair issues that could have been prevented at the time of installation.

There are several ways to clean Hydraulic Hoses and Fittings:

- **Compressed Air**. Use compressed air to blow out contaminants from each Hydraulic Hose and Fitting prior to installation. Clean, dry air is preferred. Wear ANSI-approved eye protection (safety glasses, goggles, or face shield) when using compressed air for cleaning. ***Never*** point an air hose nozzle at any part of the body, or at any other person.
- **Fluid Flushing**. If the Hydraulic Fluid is clean and compatible with the system fluid, the Hoses and Fittings can be flushed to create turbulent flow for removing particulates. Always ensure that the fluid itself is contaminant-free.

Some additional steps that will help keep the Hydraulic Fluid clean:

- **Remove old thread seal tape**. Some ports on the Hydraulic Cylinders are shipped with temporary plugs secured with thread seal tape, so make sure to thoroughly remove any leftover thread seal tape that may inadvertently enter the Hydraulic System.
- **Use a liquid thread sealant only**. Liquid thread sealant (Loctite™ 5452 or similar) is recommended. Do not use thread seal tape on any fitting. Liquid thread sealant is recommended for NPT connections, fine for JIC connections, but *not* necessary for O-ring (ORB) connections.
- **Always use clean equipment**. Using a dirty bucket or funnel to transfer the Hydraulic Fluid into the Hydraulic Fluid Reservoir will likely introduce contaminants into the Fluid. Always use clean, lint-free rags for cleaning.
- **Proper storage**. Keep the Hydraulic Fluid sealed in its container until ready for use. Store the Fluid in a clean, dry, and cool area.
- **Cover the Hoses and Fittings**. Before installation, do not leave the ends of the Fittings exposed; the same applies for the Hydraulic Hoses. As a general rule, keep the Hydraulic Hoses and Fittings capped and in a clean area until ready for use.
- **Filter the new Hydraulic Fluid**. Just because it is new does not necessarily mean it is *clean*. Use an offline filtration cart or kidney loop system to make sure the Hydraulic Fluid is clean before being transferred into the Hydraulic Fluid Reservoir (even using a heavy-duty nylon mesh screen is better than trusting what is left at the bottom of the barrel).
- **Avoid mixing different types of Hydraulic Fluid**. If Hydraulic Fluid needs to be replaced, make sure to flush the Hydraulic System of the old Hydraulic Fluid before adding the replacement fluid. Do not mix the two together.

Hydraulic Oil contamination limits

Hydraulic oil cleanliness should be between 18/16/13 and 20/18/15 (ISO 4406).

Routing the Hydraulic Hoses

Connect the Hydraulic Hoses as detailed in the following pages.

Hydraulic Hoses and Fittings are detailed in the illustrations below and on the following pages.

Hoses B and **C** are pre-installed within the Post and connected to their respective Hydraulic Cylinders. To finish the installation, uncoil each hose and make the final connections, as shown below.

Hose D is also pre-installed and connected to its Tee Fitting. Connect it to the Elbow Fitting as shown below.

10AP and 10APX Wide Configuration Hydraulic Hose Routing

Lift Model	10AP	10 APX
(Short) Hose A	5570277 (2,217 mm)	5570278 (2,522 mm)
(Med.) Hose B	5570279 (3,276 mm)	5570023 (3,588 mm)
(Long) Hose C	5570291 (6,960 mm)	5570293 (7,264 mm)
(Very Short) Hose D	5570314 (285 mm)	
Elbow Fitting	5550223	

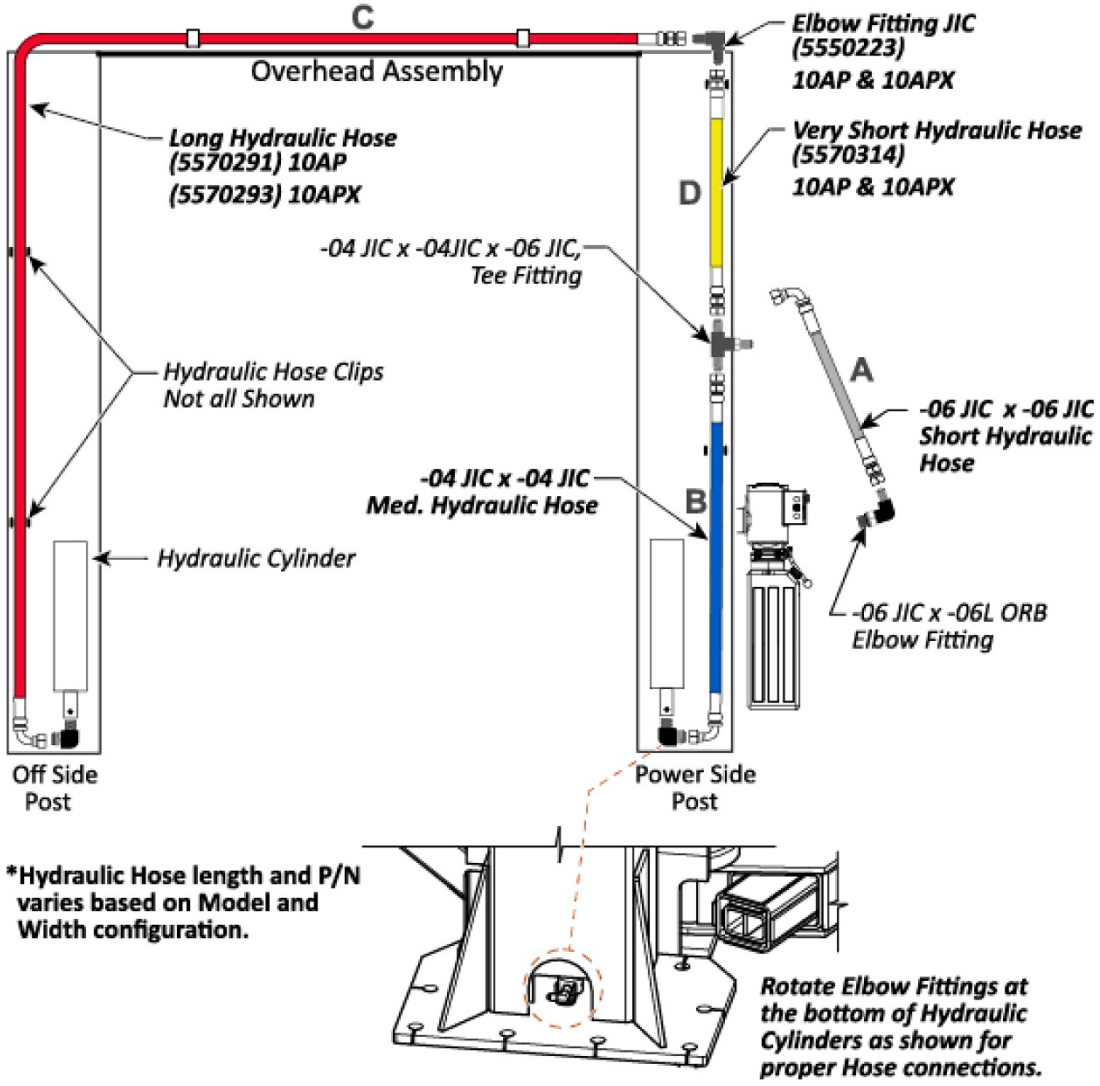

10AP-168 and 10AP-181 Wide Configuration Hydraulic Hose Routing

Lift Model	10AP-168	10 APX-181
(Short) Hose A	5570277 (2,217 mm)	5570278 (2,522 mm)
(Med.) Hose B	5570279 (3,276 mm)	5570023 (3,588 mm)
(Long) Hose C	5570292 (8,178 mm)	5570095 (8,472 mm)
(Very Short) Hose D	5570314 (285 mm)	
Nipple Fitting	5550095	

Hydraulic Hoses and Fittings are detailed in the illustration below.

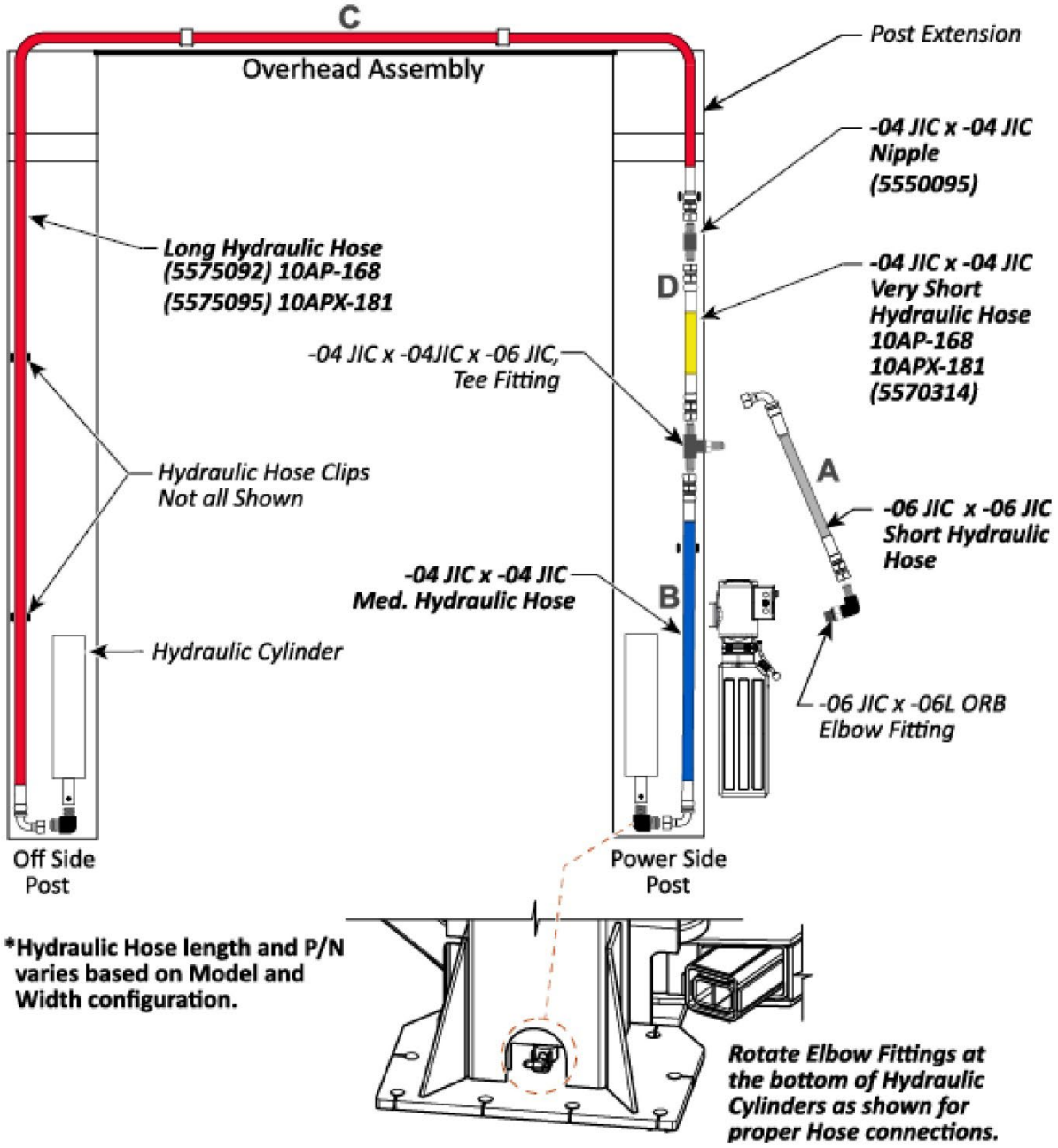

10AP Series Narrow Configuration Hydraulic Hose Routing

Lift Model	10AP	10AP-168	10 APX	10APX-181
(Short) Hose A	5570277 (2,217 mm)		5570278 (2,522 mm)	
(Med.) Hose B	5570279 (3,276 mm)		5570023 (3,588 mm)	
(Long) Hose C	5570291 (6,960 mm)	5570292 (8,178 mm)	5570293 (7,264 mm)	5570095 (8,472 mm)

Hydraulic Hoses and Fittings are detailed in the illustration below.

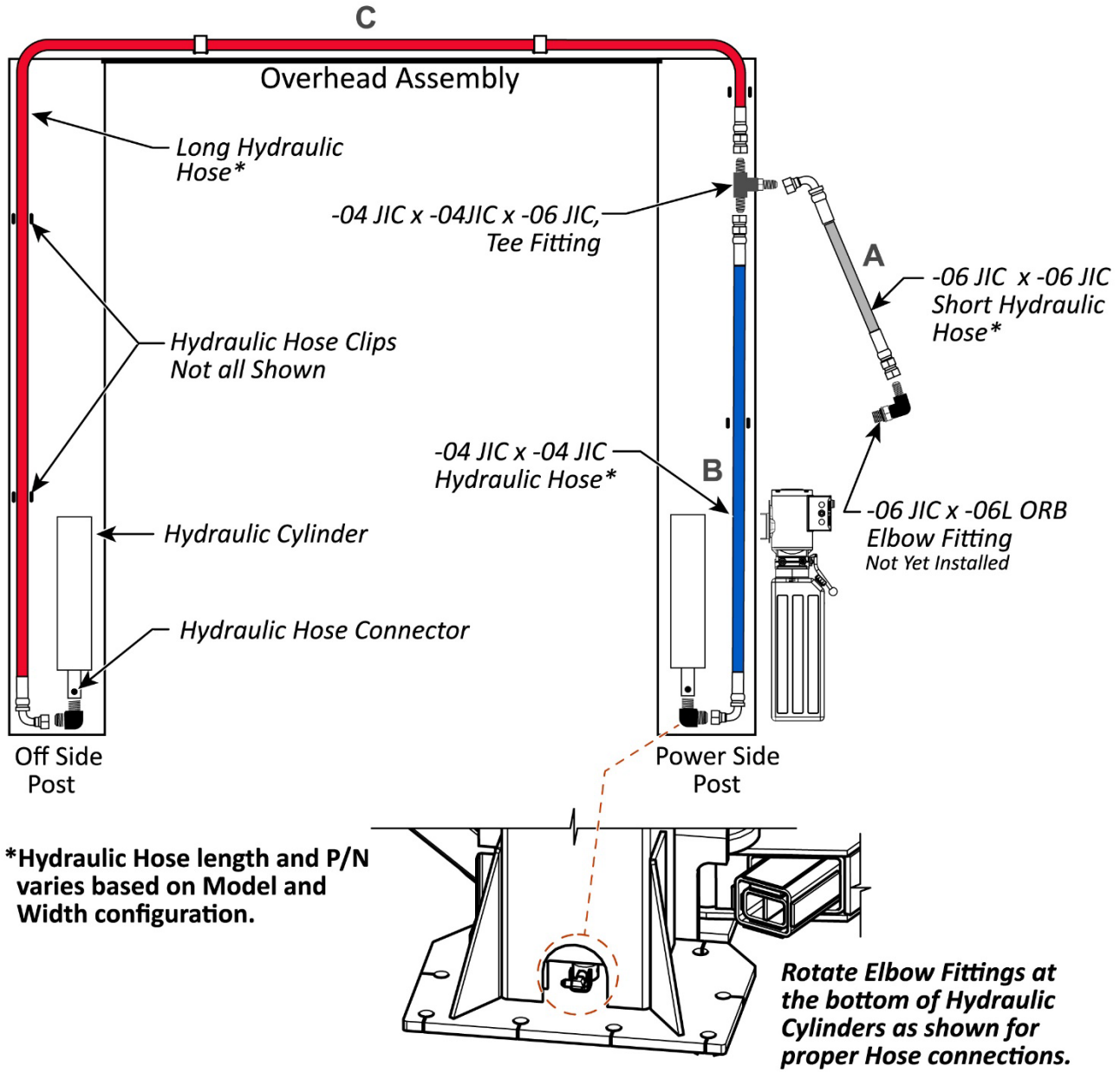

Illustration for reference only – do not scale.

Overview Hydraulic Hose Routing

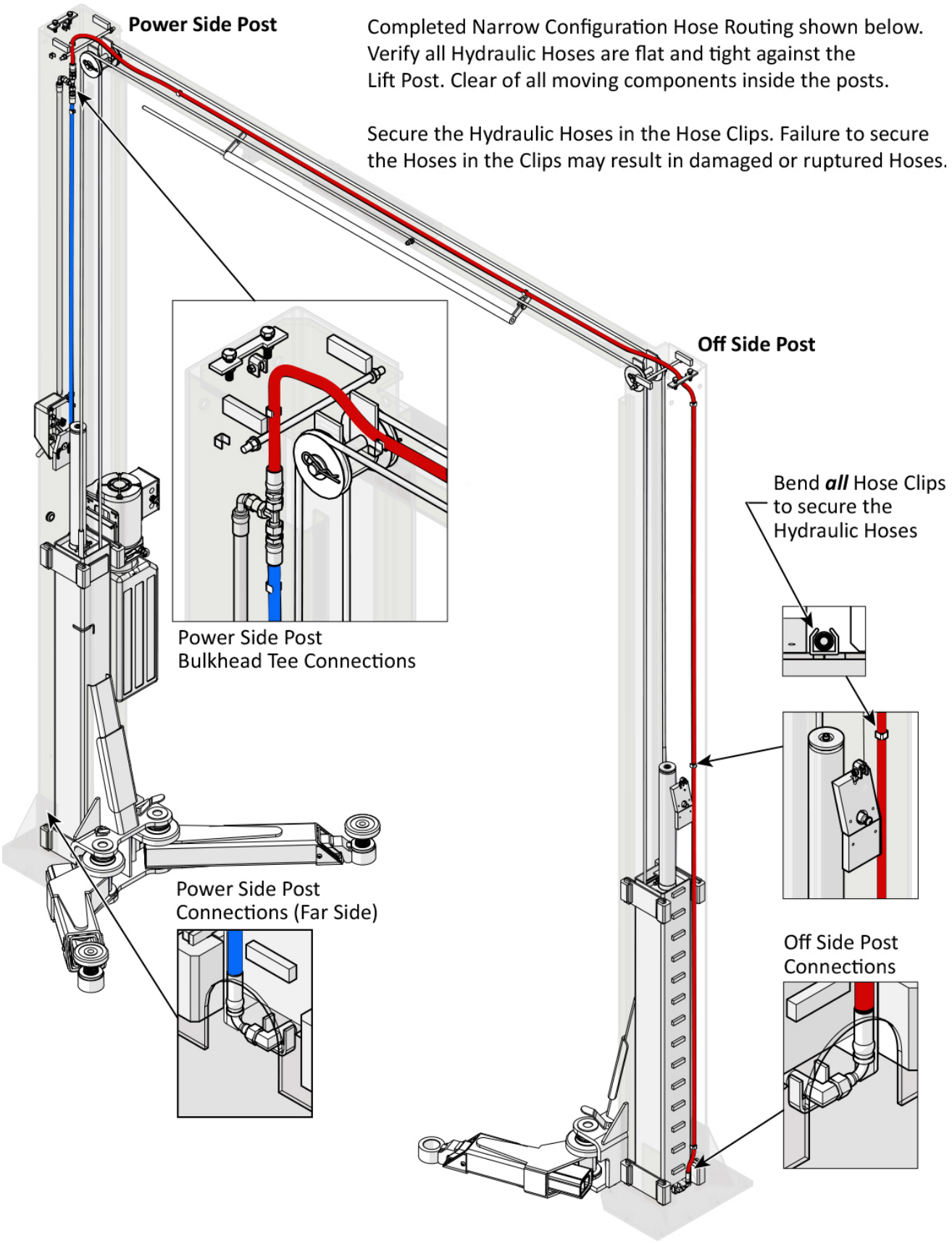

Completed Narrow Configuration Hose Routing shown below. Verify all Hydraulic Hoses are flat and tight against the Lift Post. Clear of all moving components inside the posts.

Secure the Hydraulic Hoses in the Hose Clips. Failure to secure the Hoses in the Clips may result in damaged or ruptured Hoses.

Complete the Equalizing Cables Installation

Both Equalizing Cables come pre-installed in their respective Lift Heads, and are coiled inside each Post. Each one needs to be routed over the Overhead Assembly and then down to the top of the other Lift Head.

When Equalizing Cables are fully routed, they are mirror images of each other. Refer to the illustration below.

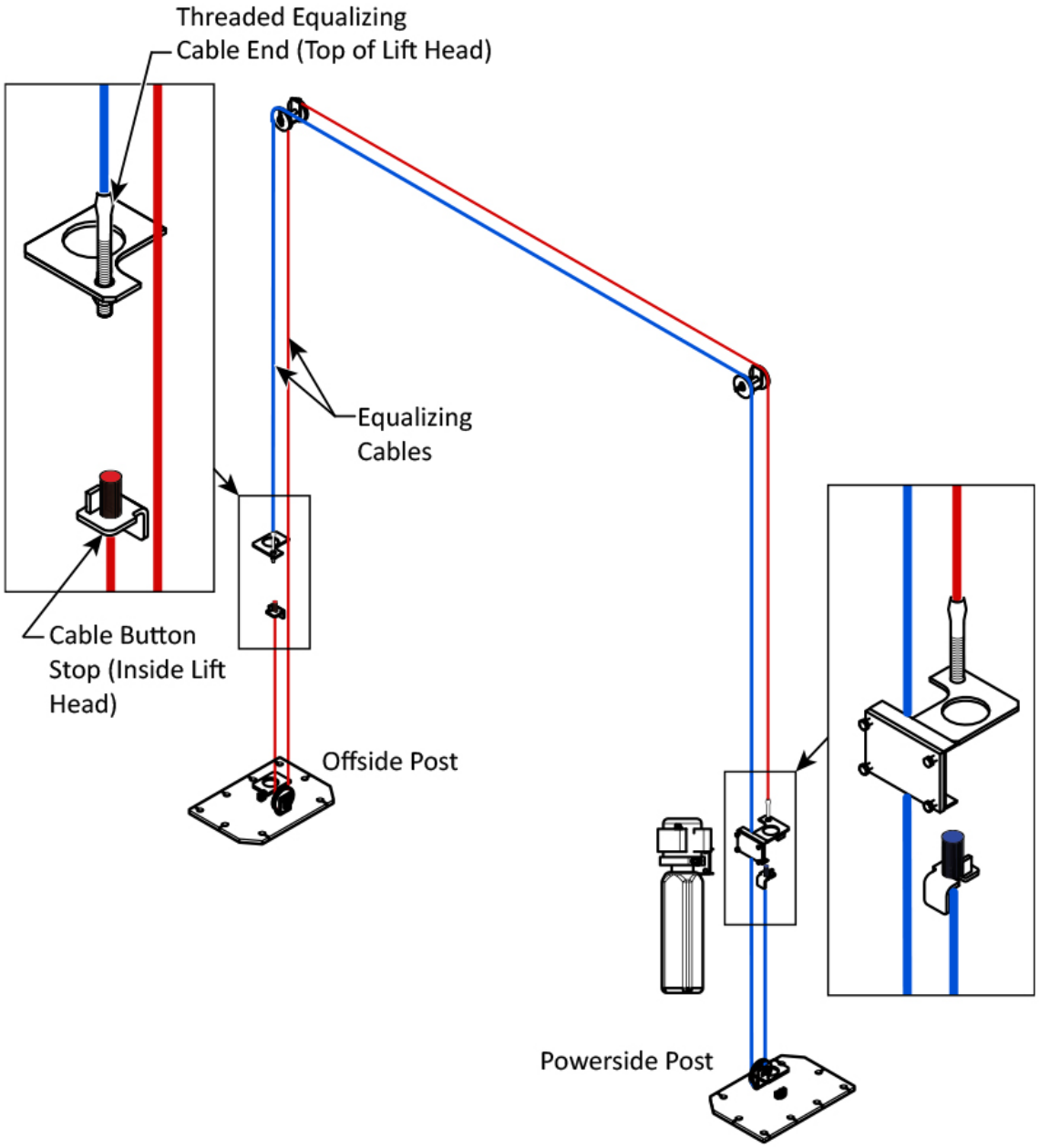

To route the Equalizing Cables:

1. Using a forklift or shop crane, manually raise both Lift Heads about 28 in. (711 mm) off the ground and engage them on the closest Safety Lock.

   Measure to verify both Lift Heads are the same distance off the ground.

⚠ **WARNING** A proper lifting device, such as a forklift or shop crane, must be used to raise and position the Lift components.

2. Verify the button ends of both Equalizing Cables are still pre-installed in the slots in their cable button stops, that both Equalizing Cables route under the Post Sheave in their Posts, and that the threaded ends have been routed through the hole at the top of the Lift Head.

   If either cable is not correct, correct it now. Do not continue until the Equalizing Cables are in their correct starting positions. Remember, for a Wide Configuration, use the button end at the very end of the Equalizing Cable. For a Narrow Configuration, use the button end away from the end of the Equalizing Cable.

3. Choose which one of the two Equalizing Cables to be placed into position first, then remove the Nut and Washer from the threaded end of that Cable.

4. Route the threaded end of the Equalizing Cable up on the inside of the Post, over the Overhead Sheave Assembly, and then out over the top of the Overhead Assembly.

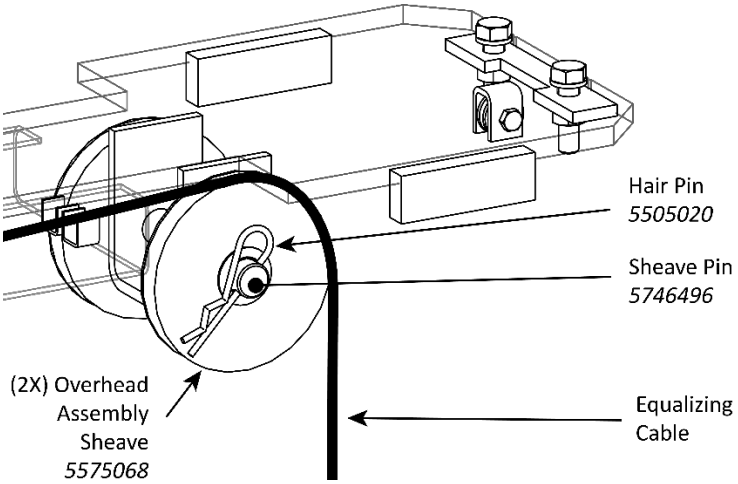

5. At the other Post, remove the Nut from the threaded end of the remaining Equalizing Cable.

6. Route the threaded end over the top of the Overhead Assembly Sheave, and then down the Post towards the Lift Head.

7. Put the threaded end of the Equalizing Cable through the hole at the top of the Lift Head, then install the Washer and Nut. Tighten the cable nuts to just take the slack out of the cables without lifting the Lift Head off the safety lock. These equalizing cables will be adjusted in the leveling procedure.

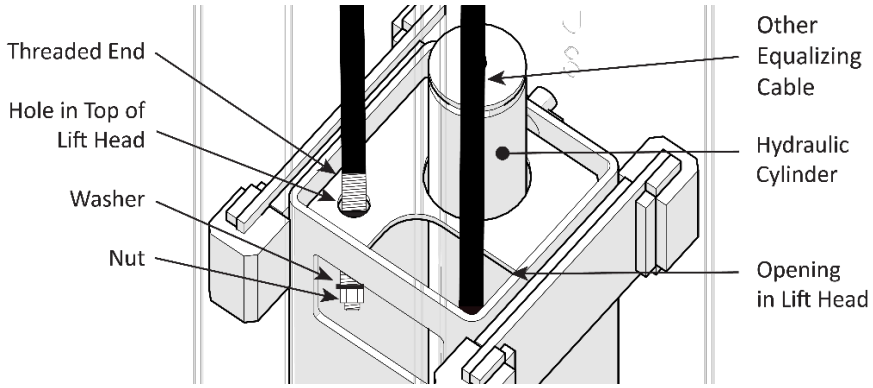

Reference only – do not scale.

8. Perform Steps 3 through 9 for the other Equalizing Cable.

Double Threaded Rod Installation

The Double Threaded Rods *(5746167)* as shown below, must be installed with M10 flat washers *(5545341)* and M10 x 1.5 Hex Nuts *(5535013)* on each Lift Post. Torque the Hex Nuts to 2-3 ft. lb. *Hydraulic Hoses are to be routed over the Double Threaded Rods*.

⚠ **WARNING** The Double Threaded Rods must be installed to ensure proper operation of the Lift.

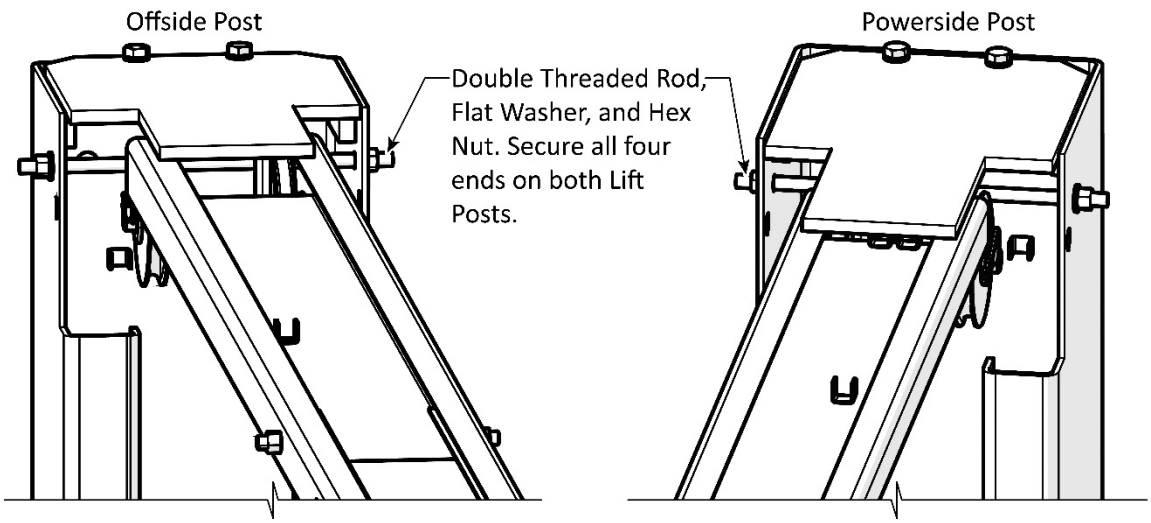

Installing the Safety Release Handle

The safety lock mechanisms are preassembled onto the lift posts with the safety lock cable coiled above the offside safety lock. 10AP series lifts include two safety assemblies: one on the power side Post (above the Power Unit) and the other on the offside Post at the same height.

The two Safety Lock Assemblies engage the Lift Head and prevent it from lowering. The Safety Release mechanism allows the Lift Head to move past the Safety Locks and lower to the ground. The Safety Locks must be disengaged at the same time so that both Lift Heads lower together. To accomplish this, the two Safety Lock Assemblies are connected to each other via a Safety Lock Cable, which is routed through the Lift Posts and the Overhead Assembly.

The following illustrations display the offside and power side safety mechanisms.

Install the Safety Release Handle

Retrieve the components listed below and assemble as shown.

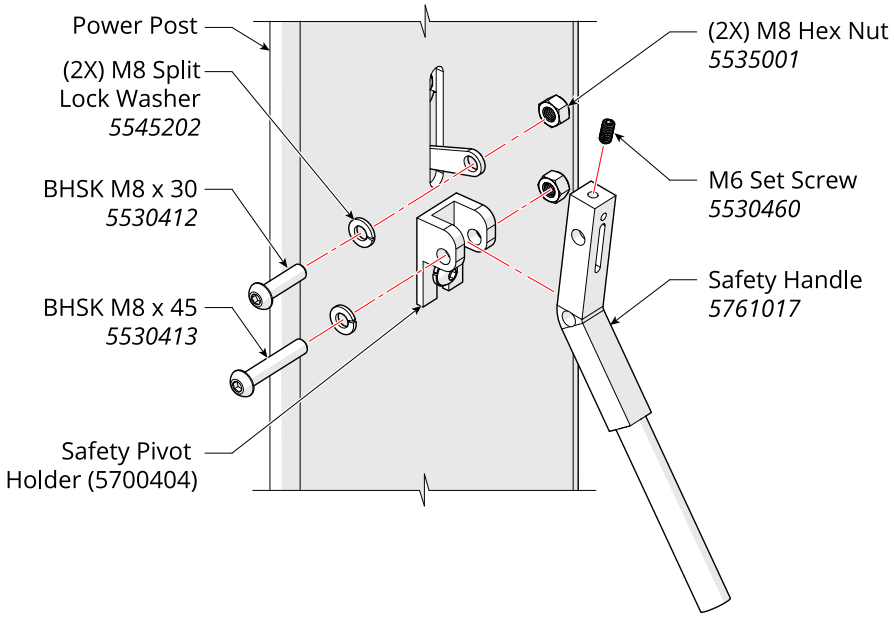

Installing the Safety Lock Cable

The Safety Lock Release Handle uses the Safety Lock Cable to release both safety Locks at the same time allowing the Lift Heads to be lowered.

The Safety Lock Cable is coiled and preinstalled on the Offside Lift Post Safety Lock. Refer to the illustration to the right.

The following drawing shows the path the Safety Lock Cable travels from Safety Assembly on the offside post to the Safety Assembly on the Power Side Lift Post.

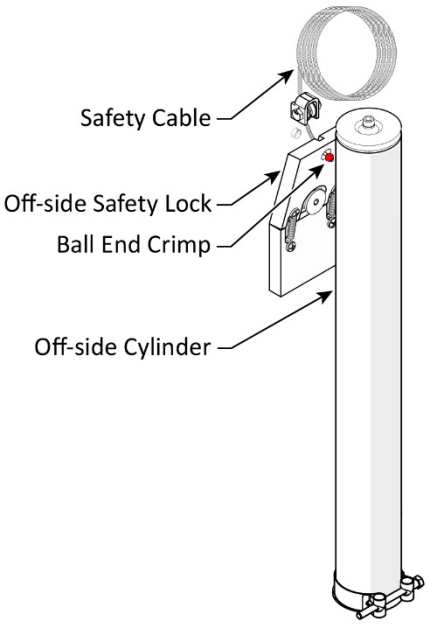

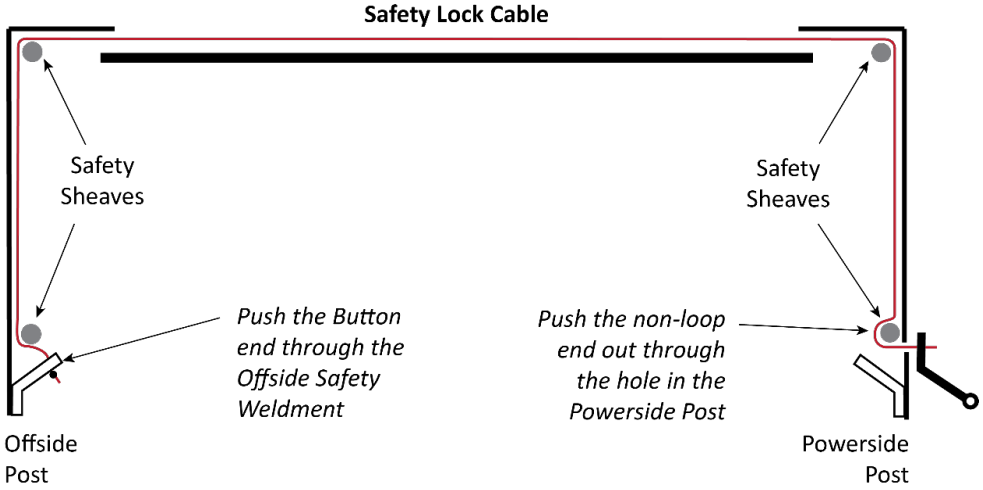

Not drawn to scale. Some components exaggerated or not shown for clarity.

The Safety Lock cables must route **over** the Limit Switch Brackets, as shown below.

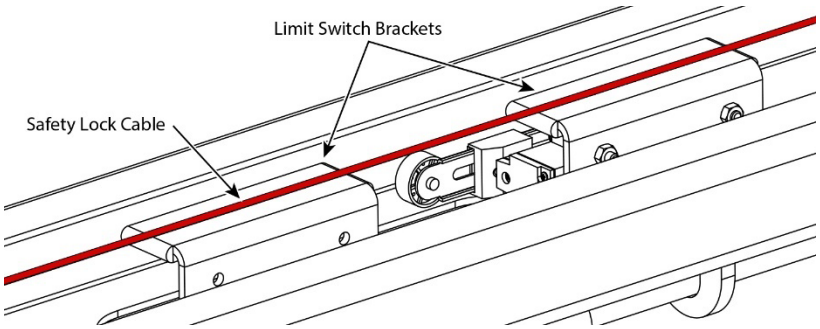

The following illustration shows the Safety Lock Cable connections to the Safety Assemblies.

Offside Safety:

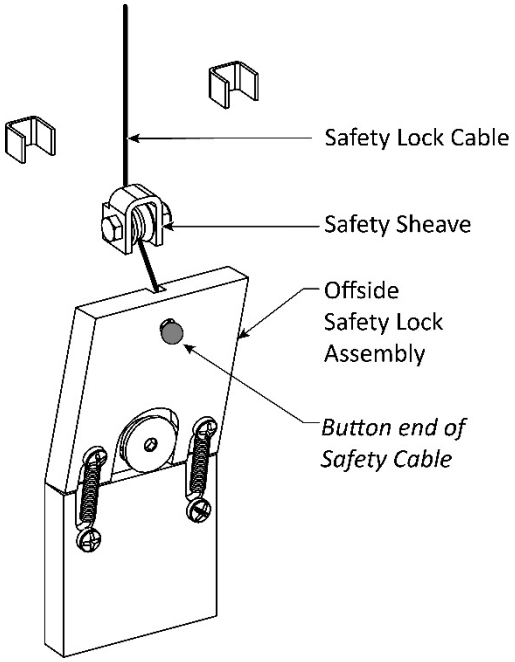

Power Side Safety:

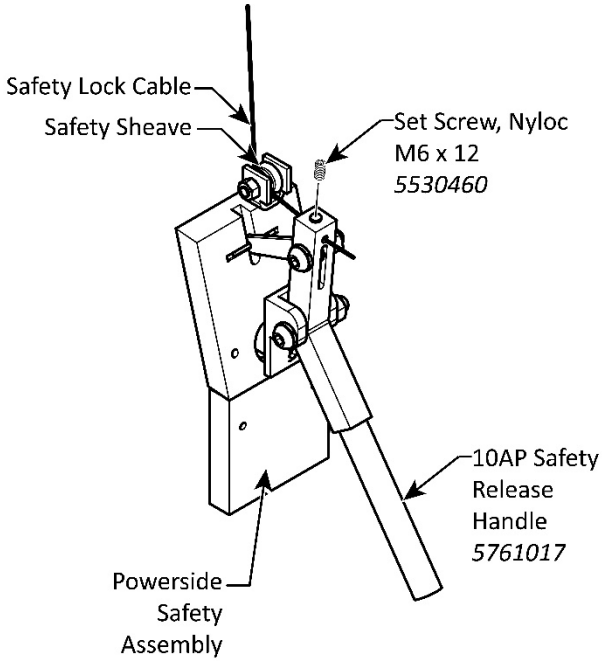

⚠ **WARNING** Accessing the Overhead Assembly will be required in order to route the Safety Lock Cable. Use care to avoid falling when working on a ladder or other lifting device.

Model	Part Number	Safety Cable Dia. and Length
10AP	5595793	Ø1.8 x 7,773 mm
10AP-168	5595831	Ø1.8 x 8,865 mm
10APX	5595832	Ø1.8 x 8,103 mm
10AP-181	5595833	Ø1.8 x 9,322 mm

To route and connect the Safety Lock Cable:

1. Locate the Safety Lock Cable. This should be coiled at the top of the offside post.
2. Route the non-button end under the Safety Sheave, upwards on the inside of the offside post, up and over the Safety Sheave at the top of the offside post, across the Overhead Assembly, over the Safety Sheave at the top of the power side post, and then downwards, on the inside of the power side post, towards the power side safety assembly.
3. ***Switching to the power side post***, route the non-button end of the Safety Lock Cable through the Safety Sheave.
4. Temporarily remove the M6 Hex Head Bolt (5530031) and M6 Split Lock Washer (5545026) that is loosely secured to the Safety Lock Release Handle.
5. Route the Safety Lock Cable through the hole in the Safety Release Handle, then replace the Bolt and Split-Lock Washer. Tightly secure the connection.
6. Install the Safety Cover (5716072) to the power side post; there is no Safety Cover for the offside post. Make sure the Safety Lock Release is usable through the slot on the front.

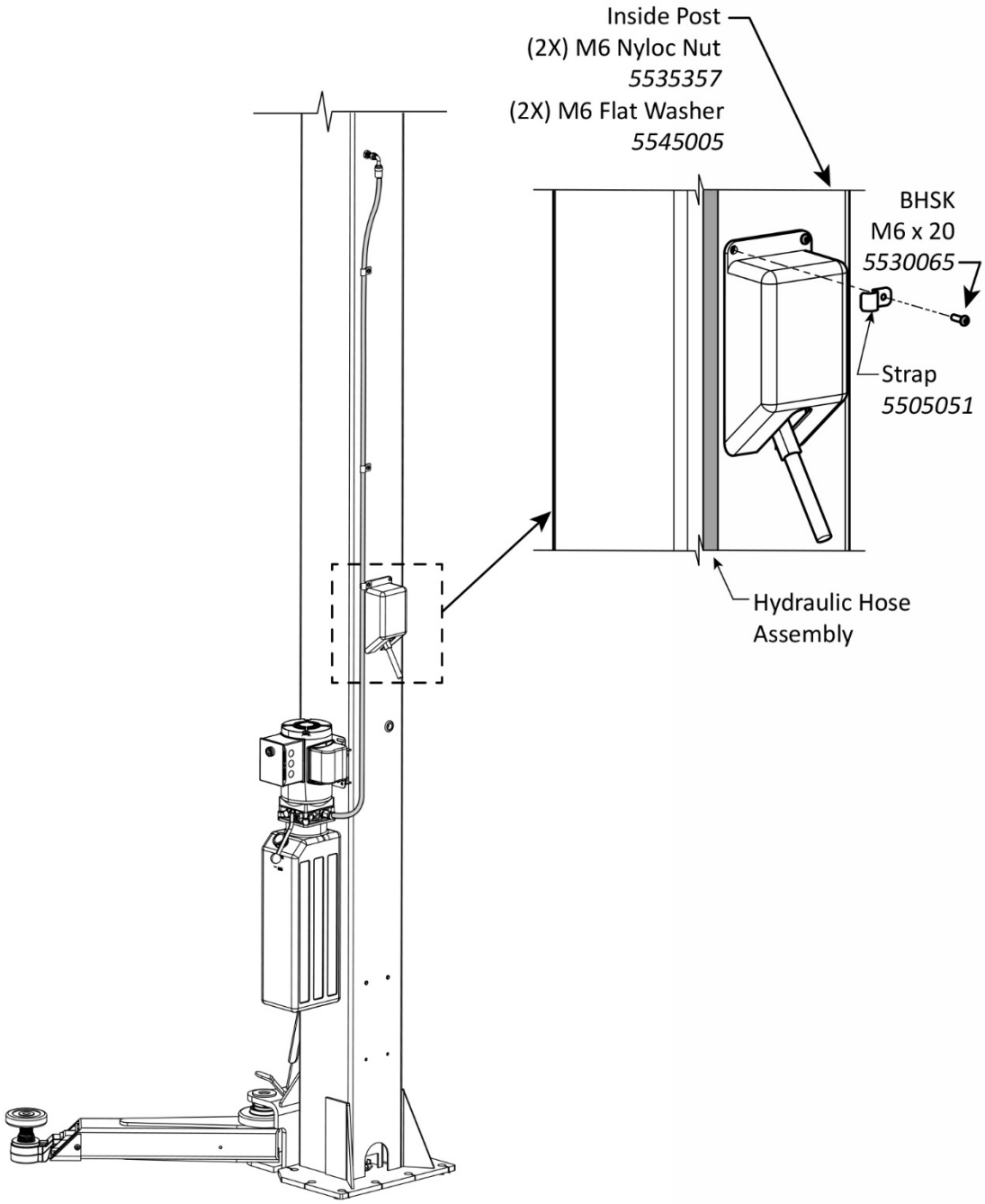

Illustration not to scale.

⚠ **CAUTION** Verify the Safety Lock Cable stays on its Safety Sheaves; this keeps it out of the way of the Equalizing Cables and the Hydraulic Hoses.

⚠ **DANGER** Verify both the Power side and the Offside Safety Assemblies engage properly ***before*** operating the Lift.

Mounting the Power Unit

This section describes how to mount the Power Unit to the Power Side Post. An electrician is not needed to ***mount*** the Power Unit, but one is required to ***connect*** the Power Unit. Refer to **Connecting the Power Unit** for installation information for the electrician and specific information about the Power Unit that came with the Lift.

NOTICE Do not connect the Power Unit to the Hydraulic System or to the power source at this point in the installation. These connections will be made later.

⚠ **CAUTION** The Power Unit is heavy. BendPak recommends having one person hold the Power Unit while a second person bolts it into place.

To mount the Power Unit:

1. Find the supplied four M8 hex head bolts, four M8 lock washers, and one vibration dampener.
2. Remove the Power Unit from the packaging material.
3. Put the Vibration Dampener into place next to the Mounting Bracket on the Power Side Post.
4. Move the Power Unit Mounting Plate next to the Vibration Dampener.
5. Secure the Power Unit and Vibration Dampener to the Power Side Post using the hardware listed below, using all four openings to secure the Power Unit.

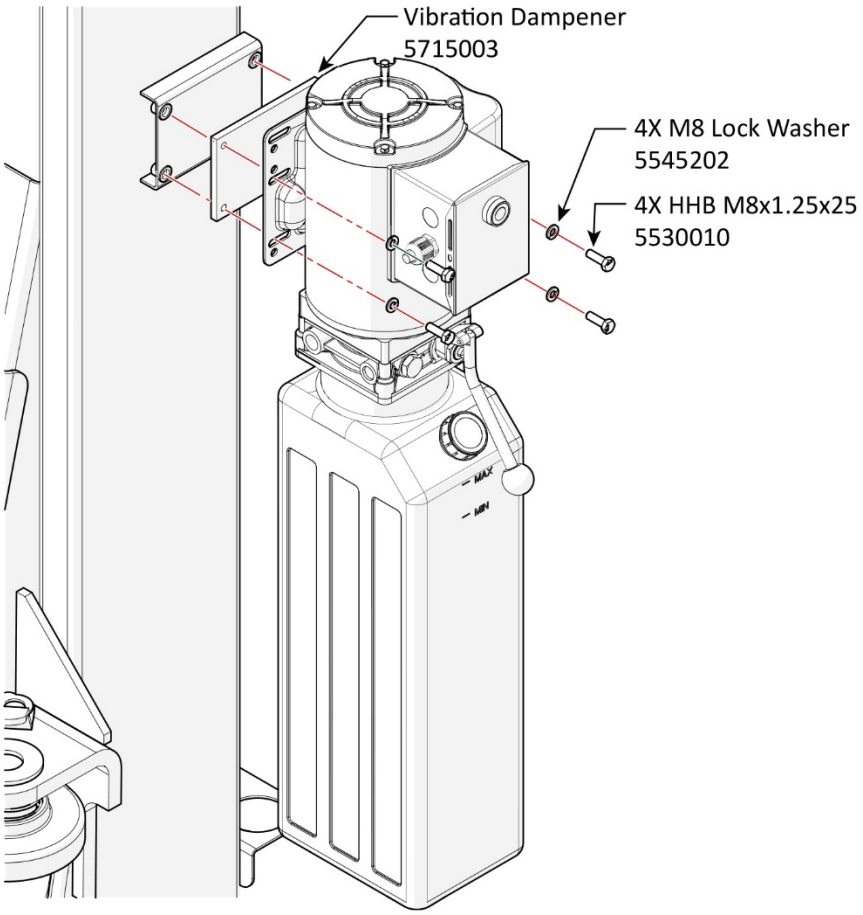

Connecting the Hydraulic Hoses

Some of the Hydraulic Hoses come pre-installed or were put into place earlier in the installation. It is now time to finish installing them and connecting them to the Power Unit.

If they did not come pre-installed, or were ***not*** put into position earlier, they must be now, ***before*** beginning the following procedure. Refer to **Routing the Hydraulic Hoses** for full instructions.

To finish connecting the Hydraulic Hoses:

1. Locate the Ø10 mm Short Hydraulic Hose and the remaining Elbow ORB Hydraulic Fitting (5550183).
2. ***On the Power Unit***, locate a Hydraulic Pressure Port (labeled P, P1, or P2) and remove the shipping plug. Place a few drops of hydraulic fluid on the O-ring before installing the Fitting on the Power Unit.

   Note: There are multiple Ports on the various Power Units that are used with 10AP Series Lifts. However, each 10AP Series Lift uses only one Hydraulic Pressure Port (identified as in the diagram below). Do ***not*** connect to any of the other Ports and do ***not*** connect to more than one Hydraulic Pressure Port. See the diagram below for possible Hydraulic Pressure Port locations.

   The following diagram shows the possible Hydraulic Pressure Port locations, depending on the Power Unit that came with the Lift.

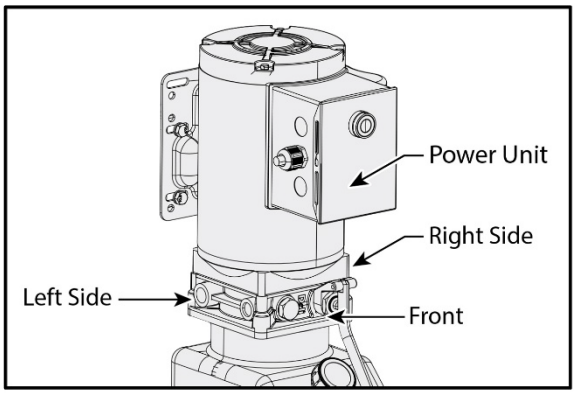

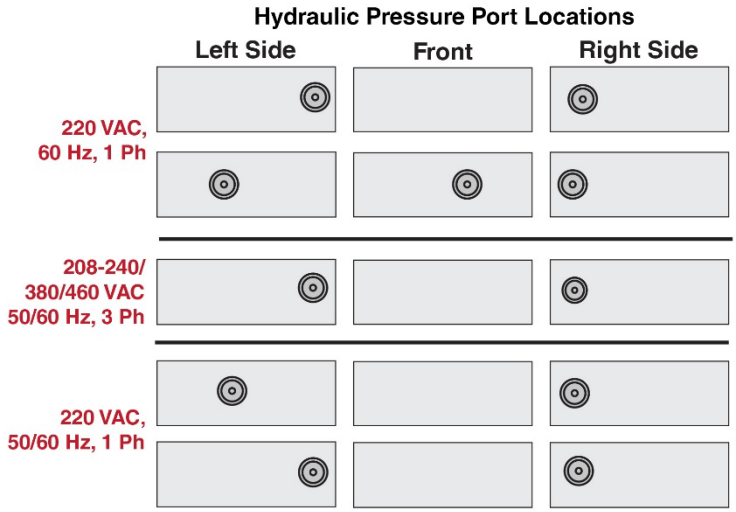

3. Tighten the Elbow Fitting appropriately, making sure to leave the 06 JIC connector facing up, towards the Tee Fitting.

4. Connect the curved end of the Short Hydraulic Hose to the Tee Fitting and finger tighten.

   This connection is made on the outside of the power side post. If the 06 JIC connector of the Tee Fitting is ***not*** on the outside of the power side post, this means the Tee Fitting was not installed correctly. Return to **Routing the Hydraulic Hoses** for more information.

5. Connect the Straight End of the Short Hydraulic Hose on the Elbow Fitting and finger tighten.
6. ***On the Offside Post***, take the Long Hydraulic Hose and route it over the Overhead Assembly towards the Power Side Post, making sure to put the Hose through the clips in the Post.
7. When installing the Lift in a ***Wide*** Configuration, the Short Hydraulic Hose must be attached to the top of the Tee Hydraulic Fitting. Then, install a Nipple Hydraulic Fitting (5550095) to the top of the Short Hydraulic Hose.

   The Short Hydraulic Hose is ***not used for Narrow Configurations***.

8. Connect the straight end of either the Long Hydraulic Hose (for Narrow Configurations) or the Very Short Hydraulic Line (for Wide Configurations only) to the 04 JIC connector facing up on the Tee Hydraulic Fitting and finger tighten the connection.
9. Using appropriate tools, go back and securely tighten all the finger-tightened connections.

Installing the Lift Arms

The Lift Pads on the Lift Arms contact the vehicle's approved lifting points.

Install the Arms as detailed in the following procedure and illustrations.

The ***first task*** is to determine the Front and Rear of the Lift:

- **If the vehicle can only approach (enter) the Lift from one direction:** The approach side is identified as the rear, the other side is the Front.
- **If the vehicle can approach from either direction:** Choose one side as the Front and the other side as the Rear. The best way to make this decision is to pick one approach direction for the vehicles to be put on the Lift, even though they may be driven in either direction. Also, consider the ease of backing out a vehicle from the chosen approach.
- The ***second task*** is to determine if the Lift Arm is a 'right' or a 'left.'

To determine right and left, stand between the two Posts, then turn to face one of them straight on. From this viewpoint, the right side of the Post is the 'right' and the left side of the Post is the 'left.'

After finishing the first Post, repeat the process for the second one.

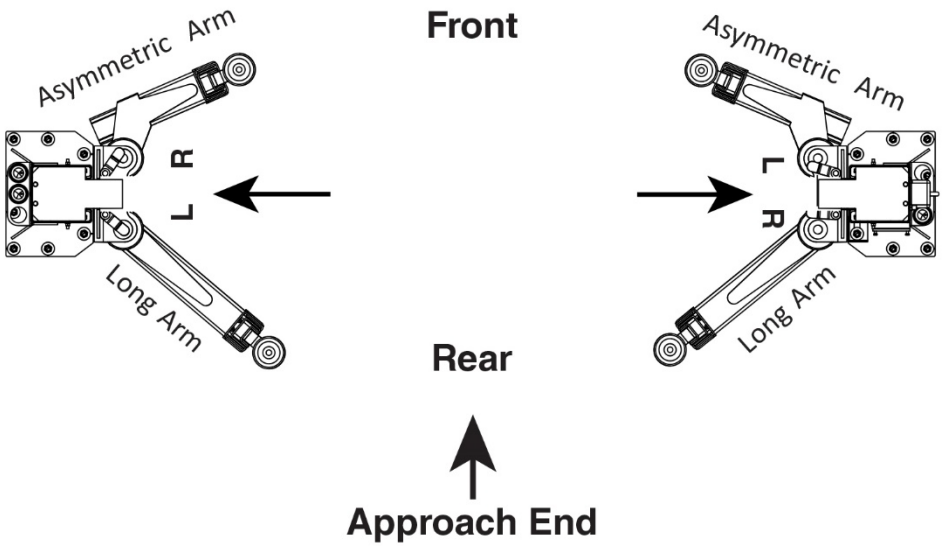

Illustration for reference only – do not scale.

Arm Installation, Component Identification:

Item	Description	Part Number	Qty.
A	Asymmetrical Arm, Triple Telescoping, Left	5216217	1
	Asymmetrical Arm, Triple Telescoping, Right	5216218	1
B	Long Arm, Triple Telescoping	5216216	2
C	Arm Lock Guide Rod	5602029	4
D	Arm Lock Pin	5601505	4
E	Full Circle Gear Stop	5701954	4
F	Set Screw M6 x 1 x 25	5530551	16
G	Clevis Pin	5505086	4

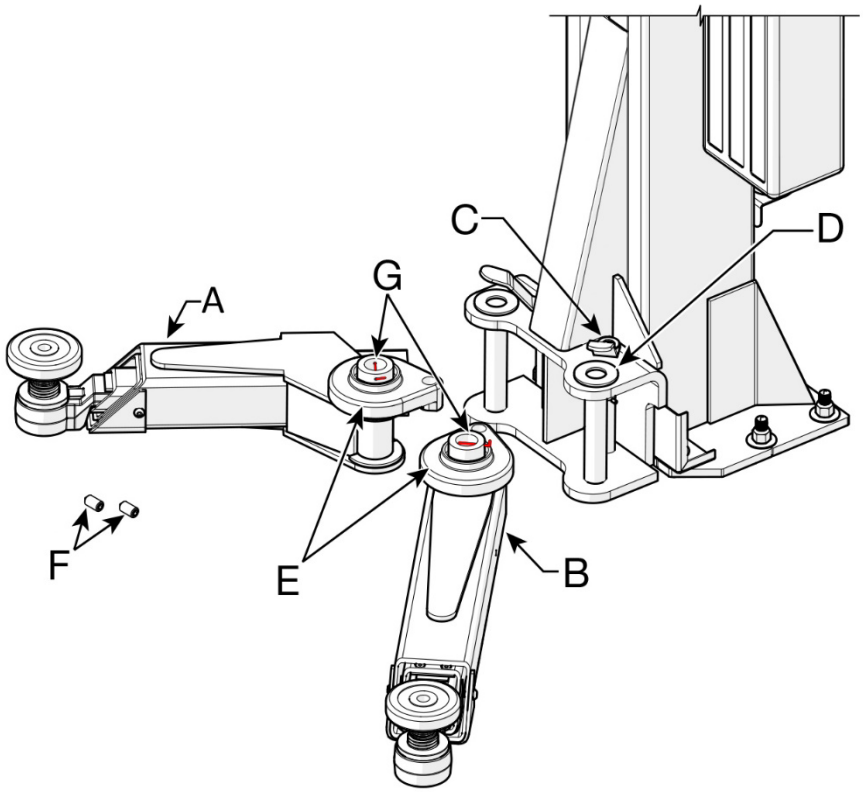

To install the Lift Arms:

1. Using a forklift or shop crane, raise the desired Lift Head to the first locking position.

⚠ **WARNING** Verify the Lift Head is engaged on a Safety Lock and the downward motion of the Lift Head is blocked by a jackstand or equivalent.

⚠ **CAUTION** The Lift Head and Lift Arms are heavy. Exercise caution when raising the Lift Head to the first locking position. Use a forklift or shop crane. Lift heavy components carefully to avoid injury.

2. Locate and retrieve the correct Asymmetrical Lift Arm (A) and the correct Long Lift Arm (B). See page 47 for correct orientation of Lift Arms.

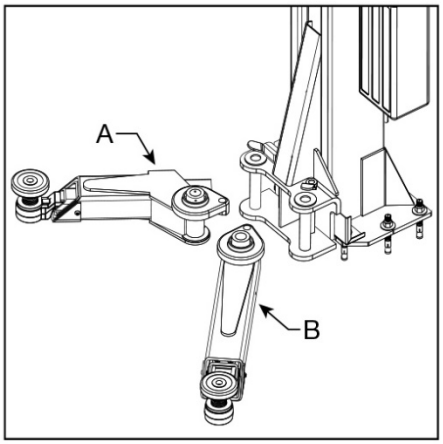

3. Remove the Arm Lock Guide Rod (C) by pulling up.

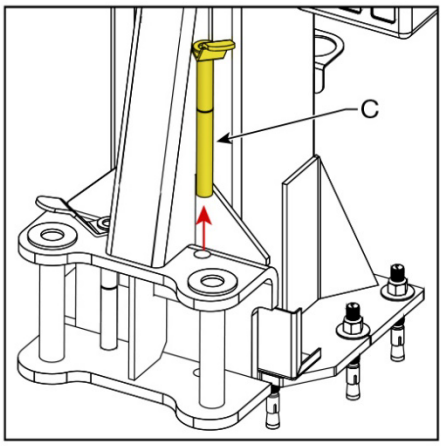

4. Remove the Arm Lock Pin (D) by pulling up.

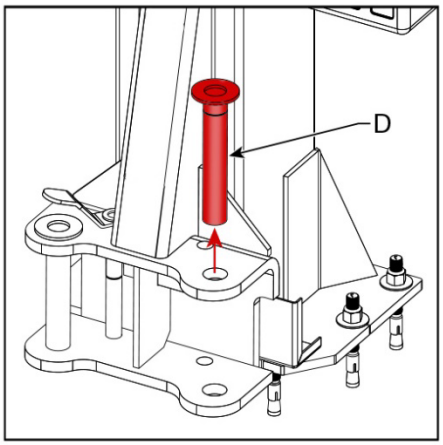

5. Insert the Long Lift Arm (B) into the Lift Head.

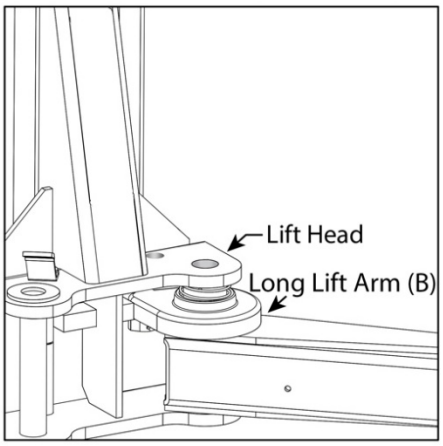

6. Remove the Clevis Pin (G) securing the Compression Spring in the Stop Gear (E). The Compression Spring will force the Stop Gear to engage the Restraint Gear mounted on the top of the Long Arm.

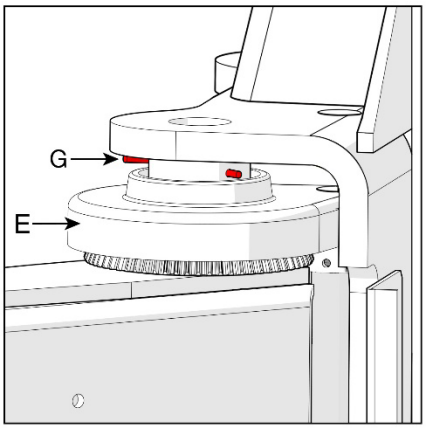

7. Install the Arm Lock Pin (D) by inserting it into the Lift Head and all the way through the Lift Arm.

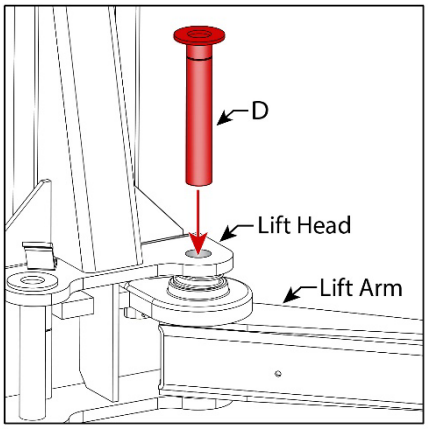

8. Return the Arm Lock Guide Rod (C) to the Lift Head, ensuring that it passes completely through the Stop Gear (E) mounted on the Long Arm (B).
9. Apply removable thread lock compound to two (F) Set Screws (5530551)

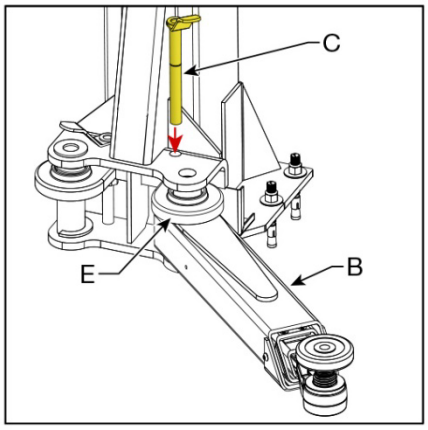

10. Secure the Stop Gear (E) to the Arm Lock Guide Rod (C) using two (F) Set Screws (5530551). One Set Screw is ***required*** on each side of the Stop Gear.

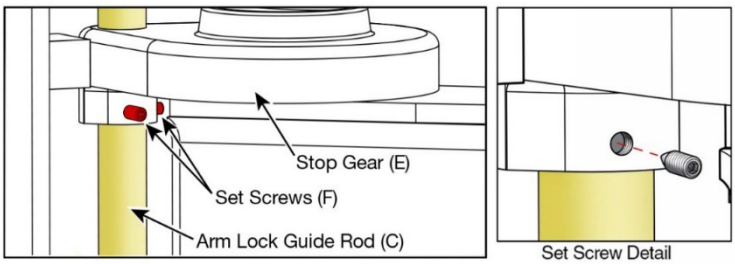

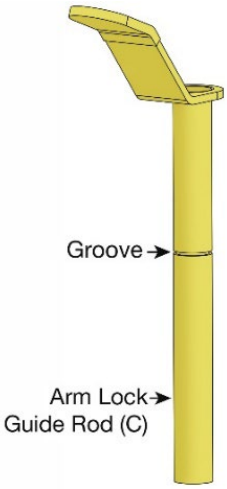

IMPORTANT! The Set Screws (F) must thread into the groove in the Arm Lock Guide Rod (C). See illustration to the right.

11. Prepare two (F) Set Screws (5530551) with removable thread locker.
12. Secure the Arm Lock Pin (D) using two (F) Set Screws (5530551) - threaded into the Arm Mount Tube (H).

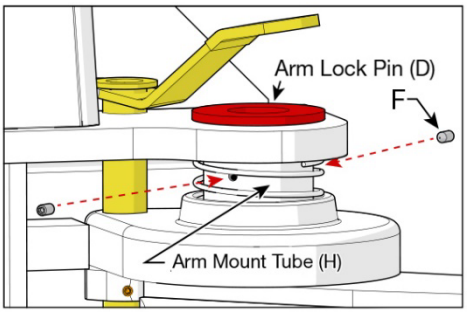

13. Repeat Steps 1 – 12 for the remaining three Lift Arm assemblies.

⚠ WARNING Verify that the Arm Restraint Gears and the Gear Stops are meshing and stay in place when up to 150 pounds of lateral force is applied—before putting the Lift into normal operation.

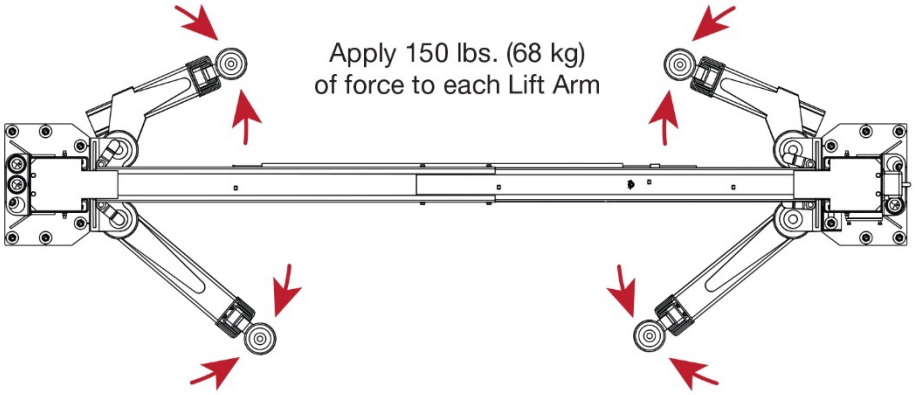

⚠ DANGER Each Lift Arm Assembly **must** be inspected and adjusted as required before each use. Do ***not*** operate the Lift if any of the four Lift Arm Restraint Systems are not functioning correctly. Replace any damaged components with approved replacement parts only.

Installing the Optional Foot Guards (CE Required)

The 9/10AP Foot Guard Kit (52210487) is to be installed on CE approved lifts. The Lift operator must always take care to keep themselves and bystanders well clear of pinch points and crush zones.

Install the Foot Guard Kit (5210487) as pictured below:

1. Remove the button head M10x1.5x20 fastener at the end of all four lift arms. Retain it for future use.
2. Install the foot guard weldment on each long straight lift arm as illustrated below (right).
3. Install the asymmetric foot guard weldment on each asymmetric lift arm as illustrated below (left).

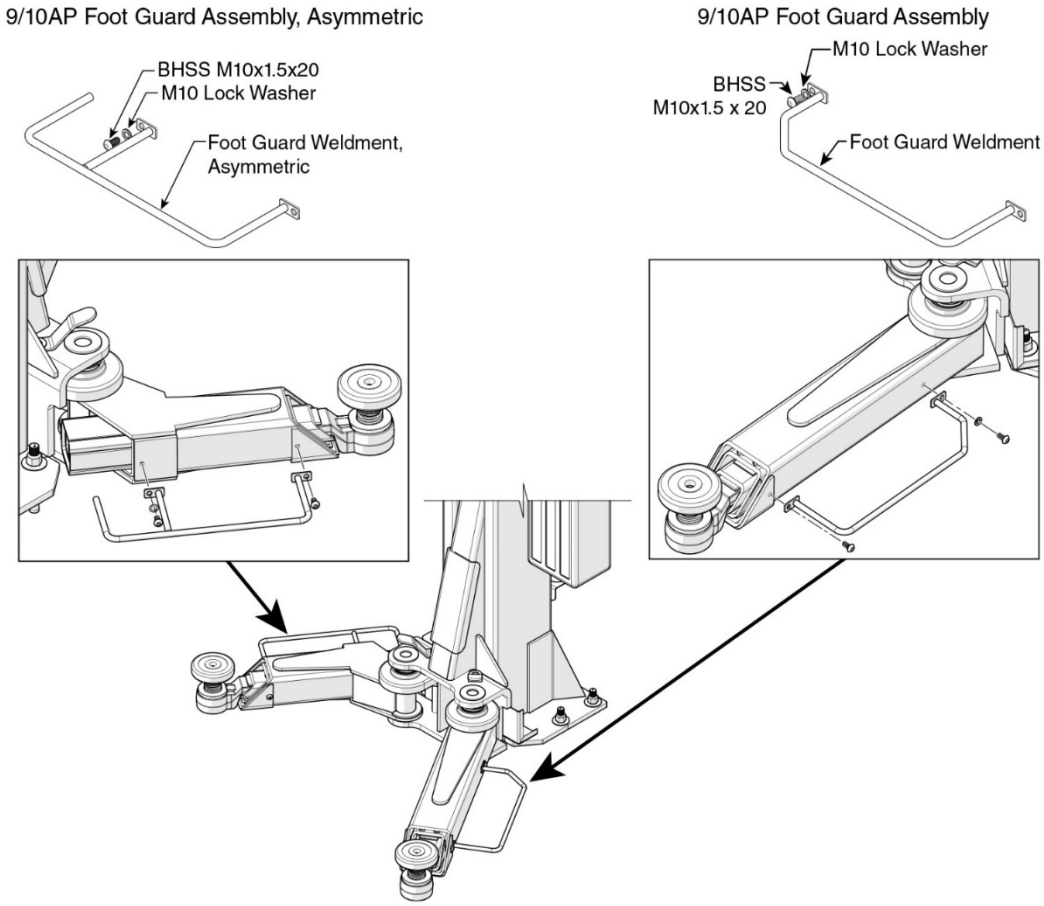

Leveling

- **Lift Posts**: Verify the Lift posts are perpendicular to the ground and parallel to each other. To verify this, measure the distance between the two Posts at 6 in. (152 mm) below the Overhead Assembly and 1 ft. (.3 m) off the ground. The two measurements (**A** and **B** in the illustration below) must be equal. If the Posts are not parallel, shim them as required—not to exceed .5 in (12.7 mm).

⚠ **CAUTION** Lift Posts that are not parallel to each other, or Lift Arms that are not level present a safety risk. Vehicles placed on the Lift could fall and cause injuries or damage to the vehicle and the Lift.

⚠ **CAUTION** Never exceed a .5 in. (12.7 mm) shim height.

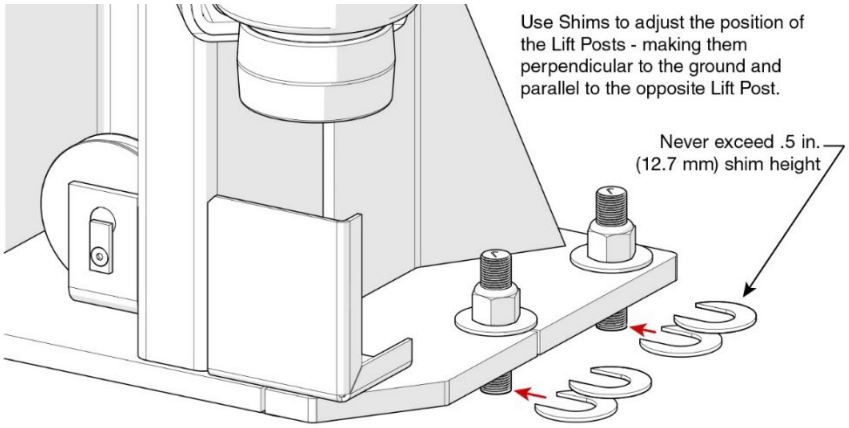

- **Lift Arms**: Once the Lift Posts are perpendicular to the ground and parallel with each other, raise the Lift Arms to the first locking position and put a level across the Lift Pads as shown below.

  Raise the Lift Heads slightly, still within the same Safety Lock window, and check the level again.

  To adjust the Equalizing Cables and correct an out of level condition, first determine which Lift Arm is low, then adjust the nut on the bottom of the threaded end of that Equalizing Cable, raising the Lift Head until both Lift Arms are level. Once the Lift Arms are level, raise the Lift and listen for the Lift Heads passing over the Safety Locks (there will be a distinct “thump”). The thumps should be simultaneous or very close together, confirming a level condition.

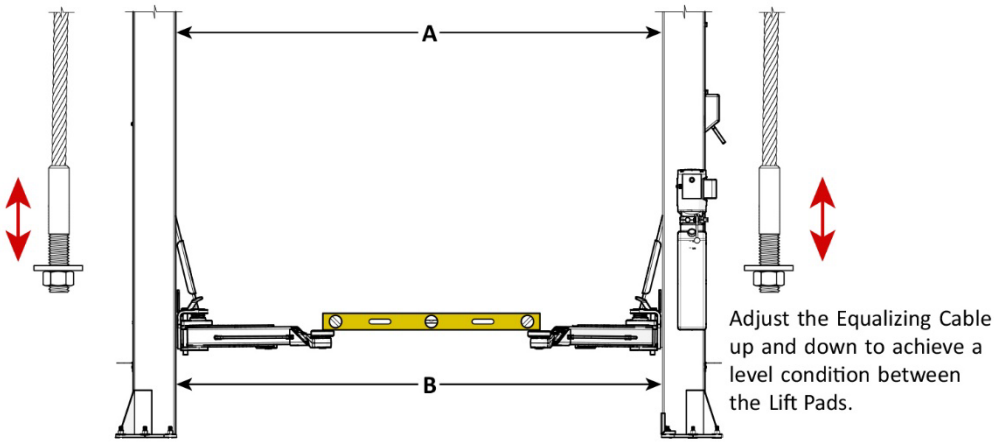

NOTICE After shimming and final leveling, torque the anchors to 85–95 ft lb.

Preparing for Electrical Work

⚠ DANGER All wiring must be performed by a licensed electrician in accordance with applicable local, state, and federal electrical codes, rules, and regulations, such as state and federal OSHA regulations and electrical codes.

NOTICE Notify the electrician in advance, so they arrive prepared with the items required to connect to the facility's power system, including an appropriate power cord with plug, a Power Disconnect Switch, and a Thermal Disconnect Switch, if required by the local electrical code. ***These items are not supplied with the Lift***.

The electrician is required to:

- **Connect to facility power**. The Power Unit is delivered with a pigtail for wiring to a power source. Have the electrician connect a power cord with plug to the electrical box on the Lift for connection to a power outlet or have them wire it directly into the electrical system at the Lift location. The Lift's Power Unit must be protected by an appropriate circuit breaker.
- **Connect the Limit Switch wiring to the Power Unit**. The Limit Switch must be wired to the Power Unit. The required wiring is included with the Lift.
- **Install a Power Disconnect Switch**. A Power Disconnect Switch is used to shut down the Lift in the event of an electrical circuit fault, emergency, or when the Lift is being serviced. Refer to **Installing a Power Disconnect Switch** for more information.
- **Install a Thermal Disconnect Switch, if required by local electrical codes**.

  The electrician is responsible for providing:

  - A power cord and appropriate 220 VAC plug, and all other items required to safely connect to the facility's power system.
  - A Power Disconnect Switch
  - A Thermal Disconnect, *if required by local electrical codes*.

  Additional information is supplied in the sections describing these procedures.

Contact the Electrician

As mentioned previously, there are installation tasks that require a licensed electrician.

⚠ DANGER All wiring ***must*** be performed by a licensed electrician in accordance with all applicable national and local electrical codes.

The electrician needs to:

- **Connect to power**. The Power Unit comes with a pigtail for wiring to a power source. Have the electrician connect a power cord with plug to the electrical box on the Lift (for connection to a power outlet) or have them wire it directly into the electrical system at the Lift location.
- **Connect the Limit Switch to the Power Unit**. The Limit Switch (which is next to the Safety Shutoff Bar) must be wired to the Power Unit. The necessary wiring is included.
- **Install a Power Disconnect Switch**. Ensures that electrical power can be completely interrupted to the Lift in the event of an electrical circuit fault, emergency, or when equipment is undergoing service or maintenance. It must be installed within sight and easy reach of the Lift operator. Refer to **Installing a Power Disconnect Switch** for more information.
- **Install a Thermal Disconnect Switch**. Ensures the equipment shuts down in the event of an overload or an overheated motor. Refer to **Installing a Thermal Disconnect Switch** for more information.

These installation tasks are described in detail in the following sections.

The electrician is responsible for providing:

- A power cord and appropriate 220 VAC plug for connecting to an appropriate power source or the items required to connect to the facility's power system
- A Power Disconnect Switch
- A Thermal Disconnect Switch, *if required by local electrical codes.*

Additional information is supplied in the following sections describing these tasks.

Electrical Information

⚠ DANGER All wiring ***must*** be performed by a licensed electrician in accordance with all applicable national and local electrical codes. Do not perform any maintenance until main electrical power has been disconnected from the Lift and cannot be re-energized until all procedures are complete.

Important electrical information:

- Improper electrical installation can damage the Power Unit Motor, which is not covered by the warranty.
- The Lift uses electrical energy. If the organization has Lockout/Tagout policies, make sure to implement them after connecting to a power source.
- Use a separate circuit breaker for each Power Unit.
- Protect each circuit with a time delay fuse or circuit breaker:
  - For a 208 to 230 VAC, *single phase* circuit, protect with a 25 Amp time delay fuse or circuit breaker for the power unit delivered with the Lift.

Connecting the Power Unit

The Power Unit and Limit Switch must be connected to an appropriate power source.

⚠ DANGER All wiring ***must*** be performed by a licensed electrician. Do not perform any maintenance or installation on the Lift first without making sure that main electrical power has been disconnected from the Lift and cannot be re-energized until all procedures are complete. The Lift uses electrical energy. If the organization has lockout/tagout policies, make sure to implement them after connecting to a power source.

⚠ DANGER Make clear to the electrician that all electrical work ***must*** conform to applicable local, state, and federal codes, rules, and regulations, such as state and federal OSHA regulations and electrical codes.

The 10AP Series Lift is available with one of any of the following types of Power Units:

- **220 VAC, 60 Hz, 1 Phase**. 220 VAC, for North American countries (U.S., Mexico, Canada).
- **208-240/380/460 VAC, 50/60 Hz, 3 Phase**. 3 Phase, multiple voltages available.
- **220 VAC, 50/60 Hz, 1 Phase**. 220 VAC, for countries *outside* North America.

NOTICE 110 VAC Power Units are currently ***not*** available for 10AP Series Lifts.

The following illustration is a typical front view of a Power Unit. Power Units may look somewhat different based on the specific Lift.

Note: The **Up** Button shown in the drawing above could be in a different location on the unit or could be a switch instead of a button, depending on the Power Unit that came with the Lift.

NOTICE Wiring information is either on the outside of the Power Unit, under the Electrical Box, or inside the cover of the Electrical Box. Have the electrician use this wiring information to connect the Power Unit to the power source.

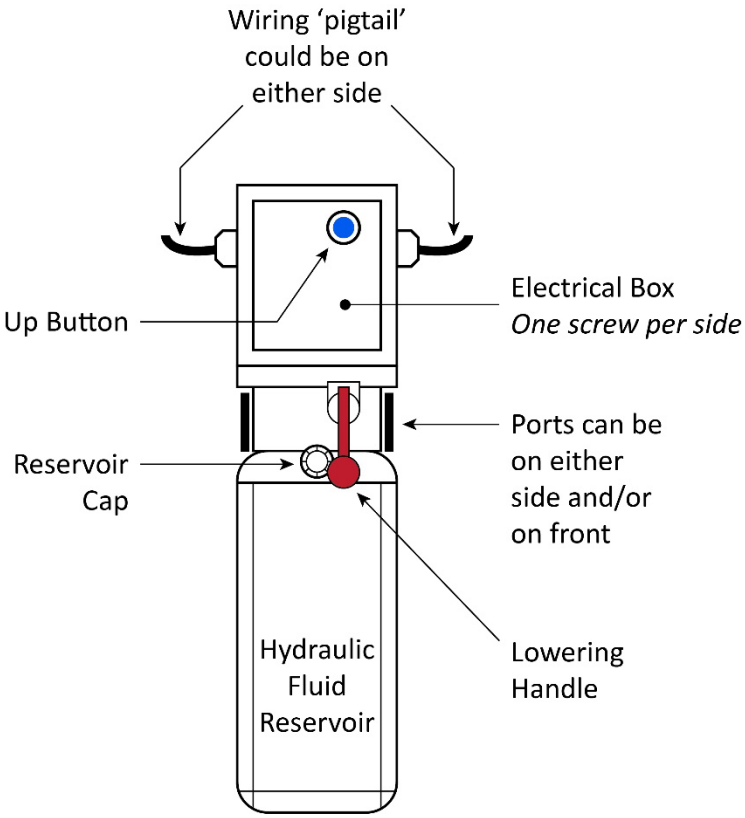

Hydraulic System Warnings

Before applying power to the Hydraulic System, note the following Dangers and Warnings:

⚠ **DANGER** Failure to observe these warnings can result in serious personal injury including, in rare cases, death.

⚠ **DANGER** The Power Unit is a Hydraulic Pump capable of developing pressures in excess of 5,000 psi (345 BAR). A pressure relief valve is used to set the pressure at the desired level. Tampering with, adjusting, modifying, or removing the relief valve is extremely dangerous and is not permitted. Only trained Hydraulics technicians are permitted to adjust the relief valve, using calibrated hydraulic pressure gauges to ensure the proper pressure setting is achieved.

⚠ **DANGER** Changes to the output pressure may render the power unit incompatible with pressure limitations of other components in the hydraulic circuit. This may cause catastrophic failure of those components, and could result in property damage, severe personal injury, or death.

⚠ **DANGER** The Hydraulic System can contain high pressure which, if suddenly released, can cause severe injury or death.

⚠ **WARNING** The Hydraulic hoses and connections must be inspected before any attempt to raise a Vehicle is made.

⚠ **WARNING** Ensure all Hydraulic Hose connections and fittings, including unused auxiliary port plugs on the Power Unit, the Flow Divider, the Cylinders and anywhere else in the Hydraulic System are tightened.

⚠ **WARNING** Do **not** attempt to connect or disconnect Hydraulic Hoses while the equipment is loaded or while a Vehicle is on the Lift or the Hydraulic System is under pressure.

⚠ **WARNING** Keep bare hands away from Hydraulic Fluid; always wear gloves when handling Hydraulic Fluid, Cylinders or Hydraulic Hoses.

⚠ **WARNING** When handling Hydraulic Fluid, always observe the manufacturer's safe handling instructions found in their Material Safety Data Sheet (MSDS).

⚠ **WARNING** **Always** promptly clean any Hydraulic Fluid spills. If a leak is the source of the spill, lockout the Lift to prevent use until the Hydraulic System is repaired.

To prepare the Power Unit:

1. Have the electrician locate the pigtail exiting the Electrical Junction Box on the Power Unit.
2. Open the Junction Box, remove the Pigtail, and then either:
   - Wire the Power Unit directly into the facility's electrical system and protect it with an appropriate circuit breaker.
   - Wire a power cord (with appropriate plug) *inside the Electrical Box* to the wiring that was connected to the Pigtail.
3. Wire the Limit Switch(es) into the incoming power. Refer to **Wiring Diagrams** for more information.
4. Fill the Hydraulic Fluid reservoir with approved hydraulic fluid.

   The reservoir holds **≈3.5 gallons (13 Liters)** of hydraulic fluid, depending on which Power Unit came with the Lift.

   Approved hydraulic fluids are any general-purpose ISO-32, ISO-46, or ISO-68 hydraulic oil or approved automatic transmission fluids such as Dexron VI, Mercon V, Mercon LV, Shell Tellus S4 / S3 / S2, or any synthetic multi-vehicle automatic transmission fluid.

⚠ WARNING Do not run the Power Unit without hydraulic fluid or damage may occur.

⚠ DANGER **Risk of explosion**: This equipment has internal arcing or parts that may spark and should not be exposed to flammable vapors. The Power Unit's motor should not be located in a recessed area or below floor level. Never expose the motor to rain or other damp environments; damage to the motor caused by water is not covered by the warranty.

Installing a Power Disconnect Switch

⚠ WARNING A Power Disconnect Switch is ***not*** provided with the 10AP Lift.

A Power Disconnect Switch is a National Electrical Code (NEC) requirement. They are designed to allow the operator to interrupt the main electrical power in the event of an emergency or circuit fault, or when the equipment is undergoing service or maintenance.

Make sure to install a Power Disconnect Switch that is properly rated for the incoming power source.

The Power Disconnect Switch must be readily accessible and installed so that it is within easy reach of the operator or in their line of sight. The Power Disconnect Switch must be clearly marked to indicate its purpose.

The illustration to the right details a Power Disconnect Switch located between the Lift's power source and its Power Unit. A quick flip of the switch immediately cuts power to the Lift.

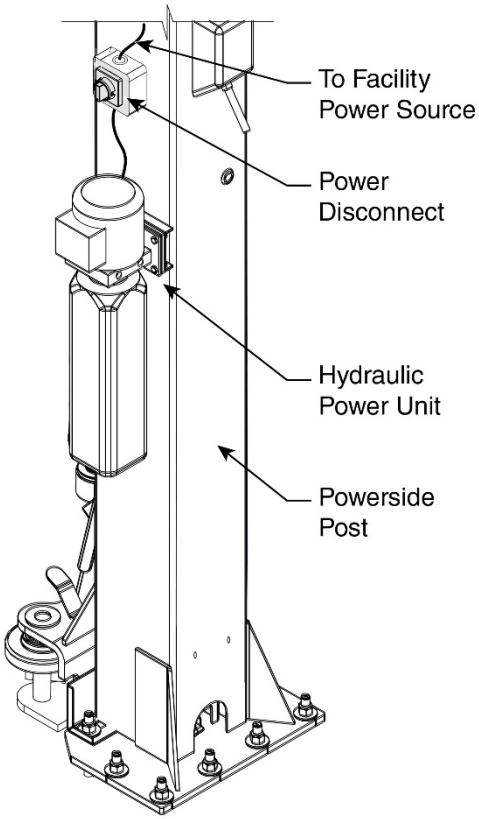

⚠ DANGER A Power Disconnect Switch ***must*** be installed by a licensed electrician in accordance with local and national electrical codes.

Have the electrician select an appropriate ***UL-listed*** Power Disconnect Switch.

Installing a Thermal Disconnect Switch

The Power Unit supplied with the 10AP Lift ***does not*** include thermal overload protection. Under NEC 430, UL 201, and CSA C22.2 No. 68, intermittent duty motors are not required to include thermal protection. Local electrical codes may vary, and other requirements may exist that the installing electrician will address, if required.

The electrician is to supply and install an appropriate motor thermal disconnect or overload device if local electrical codes require it.

⚠ DANGER A licensed electrician must install a thermal disconnect if required by local electrical codes. Do not perform ***any*** maintenance or installation on the Lift without first verifying that main electrical power has been disconnected from the Lift and ***cannot*** be re-energized until all procedures are complete.

Lubricating the Lift

⚠ **WARNING** BendPak does not supply lubrication products with this Lift. **Always** refer to the Material Safety Data Sheet (MSDS) for safe handling and disposal information. MSDS are available from the lubricant supplier or manufacturer.

⚠ **WARNING** Some lubricants may contain toxic components and must be disposed of in accordance with all national, state, and local regulations. Wear appropriate personal protective equipment for working with lubricating products, including gloves and safety glasses.

Lubricate the following with a white lithium grease or equivalent:

- All Cable Sheaves and Cable Sheave Pins on both Posts.
- The four inside corners of both Posts
- All Safety Sheaves
- All Lift Arm Pivot Points

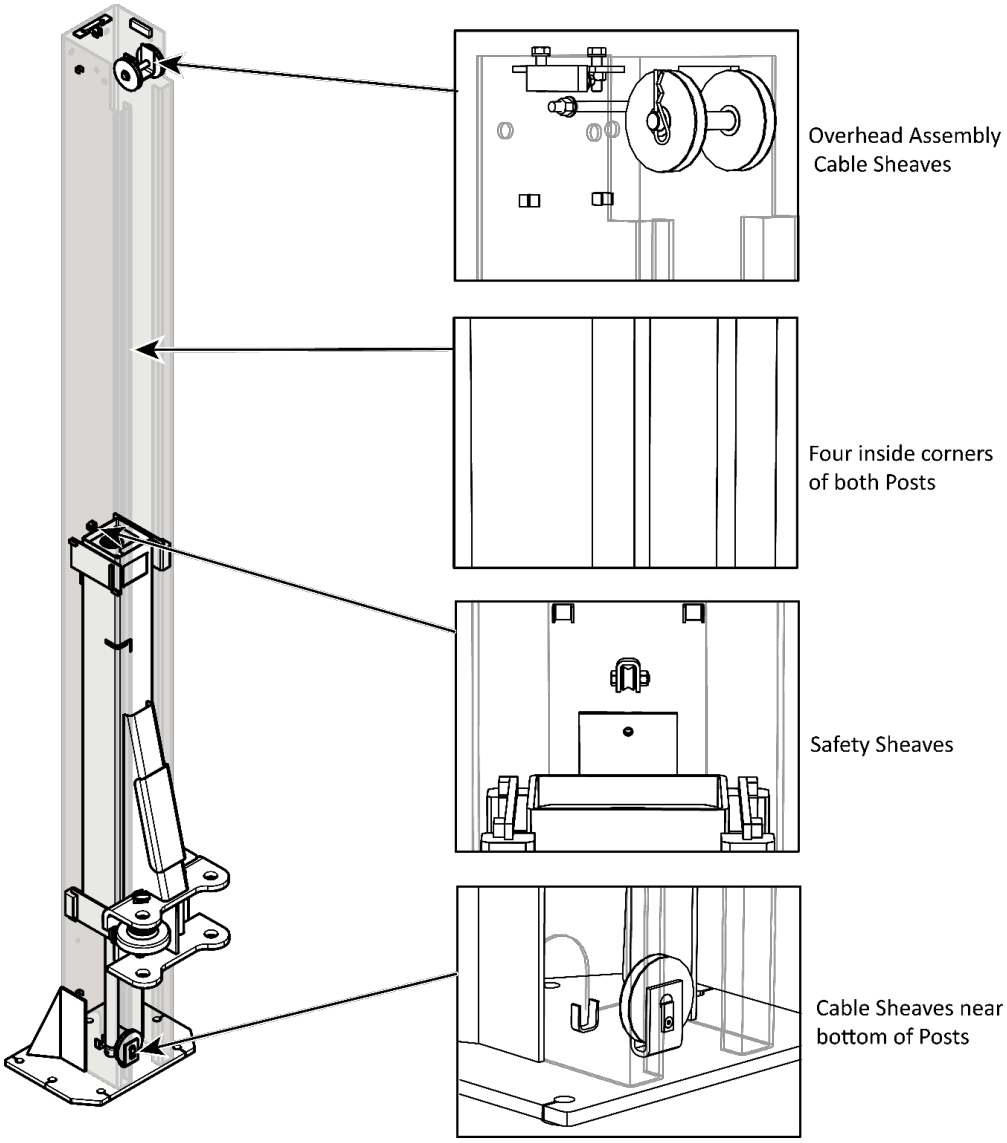

To Lubricate the Overhead Equalizing Cable Sheaves:

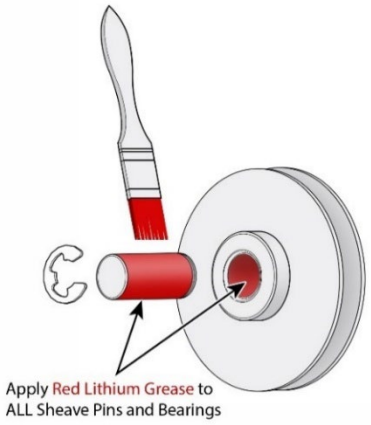

1. Raise the Lift Head to rest on at least the first Safety Lock.
2. Block the Lift Head with a 4 x 4 or equal to ensure the Lift Head cannot descend while lubricating the Lift.
3. Remove the Polyethylene Cover from the Lift Head, then loosen the Cable Nut to relax the Cable.
4. To lubricate the Overhead Sheaves:
   a. Remove the C-clip securing the Sheave Pin.
   b. Remove the Pin from the Sheave.
   c. Apply Red Lithium Grease to the Pin and Bearing.
   d. Reinstall the Sheave Pin through the Sheave then secure with the C-clip.
   e. Repeat steps **a** through **e** with the other four Sheaves.

To Lubricate the Bottom Cable Sheaves:

1. Remove the locking fastener.
2. Remove the Sheave Pin.
3. Lubricate the Pin with Red Lithium Grease.
4. Replace the Pin in the Sheave and secure with the locking fastener.
5. Tighten the Equalizing Cable adjustment in the Lift Head.

   See **Leveling** to readjust the Lift Arms.
6. Replace the Polyethylene Cover after leveling the Lift Arms.
7. Spray the inside of the post with White Lithium Grease.

Review Final Checklist Before Operation

Make sure the following steps have been completed before putting the Lift into normal operation:

- Review the **Installation Checklist** and verify all steps have been performed.
- Make sure the Power Unit is getting power from the power source.
- Check the Hydraulic Fluid reservoir. It must be full of approved Hydraulic Fluid or automatic transmission fluid. ***The motor may be damaged by running it without enough fluid.***
- Check the Hydraulic System for leaks. Verify all Hydraulic Hose connections, Hydraulic Fittings, and Auxiliary Port Plugs on the Lift and Power Unit are tight.
- Make sure both Posts are properly plumbed, shimmed, and stable.
- Check to see that all Anchor Bolts are correctly torqued.
- Lubricate all Cable Sheaves and the inside of the Posts where the Slide Blocks move.
- Make sure both Double Threaded Rods are in place and tightened near the top of both Posts.
- Verify all Cables are properly positioned in their Sheaves.
- Verify all Cable Sheave Retaining Pins and/or Clips are secure.
- Verify both Safety Lock Assemblies are connected and working normally.
- Verify the Cylinder Clamps are secured on the Hydraulic Cylinders just above the Lift Head.
- Make sure an Operational Test has been performed.

Leave the Manual with the Owner/Operator

Deliver the Installation and Operation Manual to the owner/user/employer along with the other instructional materials furnished with the lift.

Perform an Operational Test

Before putting the Lift into normal operation, BendPak recommends raising and lowering it several times with a typical vehicle on the Lift. This will allow the operator get a feel for the controls as well as remove any residual air from the Hydraulic System (sometimes called “bleeding” the system).

⚠ DANGER Automotive Lifts are dangerous tools when used by inexperienced or impaired technicians. Lifting a vehicle is a serious endeavor with life-threatening risks if mandatory safe lifting precautions are ignored.

During the Operational Test, check for proper installation and operation. Do not raise any additional vehicles until a thorough Operational Test has been done with a typical vehicle.

⚠ WARNING Never raise a vehicle whose weight exceeds the rated capacity of the Lift. Do not leave the controls until the Lift is engaged on its Safety Locks. Only trained personnel should raise or lower the Lift.

To perform an Operational Test:

1. Make sure that all steps in **Review Final Checklist before Operation** have been completed before proceeding further.
2. Follow the instructions in **Raising a Vehicle** and **Lowering a Vehicle** to safely raise and lower a vehicle on the Lift.

⚠ **DANGER** Follow the instructions carefully when it comes to contacting the manufacturer's recommended Lifting Points on the underside of the vehicle. Otherwise, the vehicle could become unstable and fall, which could damage the vehicle and the Lift, and injure or even kill anyone underneath.

3. Adjust the Lift Arms under the vehicle so the Lift Pads are directly under the Lifting Points for the vehicle being raised. If necessary, use Auxiliary Adapters **(see Optional Accessories)** for additional height.
4. Press the **Up** button to raise the Lift until ***just before*** the Lift Pads contact the Lifting Points.
5. Check the Arm Restraint Gears on all four Lift Arm Assemblies to verify they are engaged. If they are not engaged, move the Lift Arms back and forth until they engage.
6. Raise the Lift until the tires of the vehicle are a few inches off the ground.
7. Verify all four Lift Pads are making solid contact with all four vehicle Lifting Points.

   If any of the Lift Pads are ***not*** making solid contact with the Lifting Points, carefully lower the Lift and start over again. It is critical that the Lift Pads make solid contact with all vehicle Lifting Points.
8. Raise the vehicle approximately 3 ft. (.9 m) off the ground. Release the **Up** button, then *press and hold* the Safety Lock Release Handle and the Lowering Handle to lower the Lift back down.

NOTICE Residual air in the Hydraulic System can cause the Lift to shake, move erratically, or squeak, which is normal when first starting to use the Lift. It will soon stop doing this, as the Hydraulic System is self-bleeding.

9. Wait for one minute.

⚠ **WARNING** The Power Unit is not a constant duty motor; ***it cannot be run continuously***.

10. Repeat the process, this time raising the Lift, engaging it on a Safety Lock position, taking it off the Safety Lock position, and then lowering it back down to the ground.
11. If the Lift is working without shaking, moving erratically, or squeaking, there is no need to repeat the procedure. If the Lift is shaking, moving erratically, or squeaking, repeat the procedure one more time. If issues continue, refer to **Troubleshooting** for assistance.
12. When the Lift is on the ground and the vehicle is on all four tires, move the four Lift Arms to their full drive-through positions, then drive the vehicle out.
13. With no vehicle on the Lift Arms, press and hold the **Up** button on the Power Unit.
14. Have a capable assistant push up on the Safety Shutoff Bar until it triggers the Limit Switch.

    If the Lift Arms do not stop rising when the Limit Switch is triggered, the Limit Switch is either not installed correctly or not wired correctly. Return to the sections in this manual where installation and wiring of the Limit Switch is described to identify and correct the issue.

⚠ **CAUTION** Do not put the Lift into normal operation until it has been confirmed that triggering the Limit Switch stops the Lift Arms from rising.

Operation

This section describes how to operate the 10AP Series Lift.

⚠ **DANGER** Automotive Lifts are dangerous tools when used by inexperienced or impaired technicians, and lifting a vehicle is a serious endeavor with life-threatening risks if mandatory lifting precautions are ignored.

Lift Operation Safety Rules

⚠ **DANGER** Operator safety depends on reading, understanding, and implementing these Safety Rules. Do not skip over them; read them carefully and follow all operational procedures.

Do the following ***before*** raising or lowering a vehicle positioned on the Lift:

Check the Lift. A complete inspection of the Lift is required before each use. Check the Hydraulic System for loose connections, including Hydraulic Fittings, Hydraulic Hoses, and any Auxiliary Port Plugs. Check the Lift for any missing, heavily worn, or damaged parts. Do not operate the Lift if any issues are found. Instead, take the Lift out of service and contact the dealer, email **support@bendpak.com**, or call **(888) 856-5820** (follow the prompts).

- **Check the area**. Keep the area around the Lift clean and free of obstructions; anything that could interfere with the safe operation of the Lift. Do not forget to check ***above*** the Lift. If any obstructions are found, move them out of the way. Do not allow any people or animals within 30 ft. (9.14 m) of the Lift while it is in motion.
- **Check the operators**. Make sure that everyone who is going to operate the Lift has been trained in its use, has read the labels on the unit, and has thoroughly read this manual and fully understands how the equipment works. Only the operator should be within 30 ft. (9.14 m) of the Lift when it is in motion. Do not allow children to operate the Lift. Do not allow anyone under the influence of drugs or alcohol to operate the Lift.
- **Check for safety**. Make sure everyone who is going to be walking near the Lift is aware of its presence and takes appropriate safety measures. Only put vehicles on the Lift Arms. ***When raising a vehicle on the Lift, do not leave it until it is securely positioned on the Safety Locks***. When lowering the Lift, do not leave it until it is on the ground.
- **Check the Vehicle**. Never exceed the Lift's weight rating. Do not allow people inside a vehicle being raised. Make sure the vehicle is not overbalanced on either end. Make sure the operator understands manufacturer's recommended Lifting Points for the vehicle. Never raise just one side, one corner, or one end of a vehicle.

⚠ **WARNING** Always use care when near the Lift. When it is in a lowered position, be careful not to trip over it. When it is raised, be careful of overhead obstructions. ***When raising or lowering a vehicle, keep all people, animals, and objects at least 30 ft. (9.14 m) away from the Lift***.

⚠ **WARNING** Never allow anyone under a raised vehicle unless the Lift is engaged on its Safety Locks and the vehicle is stable on the Lift. Always use jack stands to secure the vehicle when work is underway or if removing components that will significantly change the vehicle's balance on the Lift.

About Lifting Points, Adapters, and Auxiliary Adapters

It is important to keep in mind, when using a frame-engaging Lift, that the raised vehicle must be balanced on the four Lift Arms. If the vehicle is not balanced, it is more likely to become unstable and slide off the Lift, possibly damaging the Lift, the vehicle, and anything under or around the Lift. When raising a vehicle by its Lifting Points, the vehicle is balanced.

⚠ WARNING All four Lift Arms **must** be used when raising a vehicle. Never use just one, two, or three Lift Arms as the vehicle will be unstable and could slip off the Lift, possibly damaging the Lift and the vehicle, as well as injuring anyone around or under the Lift.

NOTICE The manufacturers' recommended Lifting Points do not take into consideration any major changes that might have been made to the vehicle. If the motor is removed, for instance, the vehicle's Lifting Points may no longer be the best balancing points.

Some vehicles have indicators on the underside that identify the manufacturer's Lifting Points, while many do not.

The best approach is to find the vehicle in the guide *Vehicle Lifting Points for Frame Engaging Lifts* or contact the manufacturer of the Vehicle. This guide also includes a page of safe lifting suggestions, which everyone who uses the Lift should read.

Lifting it Right: A Safety Manual from the Automotive Lift Institute includes a wide variety of information about Lifts and how to use them safely.

⚠ DANGER ***Never*** place Contact Pads on non-approved, non-load holding vehicle sill covers or side skirts!

Standard Accessories

The 10AP Lift includes **Four Screw Lift Pad Assemblies** (5215704). These are designed for vehicles with unibody construction and are height adjustable up to 3 in. (76 mm).

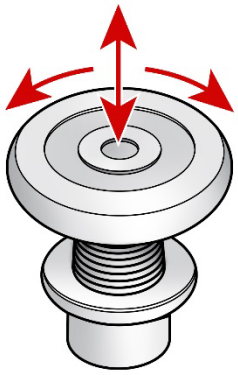

Optional Accessories

IMPORTANT! The Optional Accessories listed below are ***not*** included with the 10AP Lift.

Visit **bendpak.com** for additional Adapters and Auxiliary Adapters (also called height adapters or extenders). Available options include the following.

- **Four Short Auxiliary Adapters - 2.25 in. (57 mm)** (5215757). For positioning the height of the Auxiliary Adapters to make better contact with vehicles.
- **Four Medium Auxiliary Adapters - 2.5 in. (64 mm)** (5215758). For positioning the height of the Auxiliary Adapters to make better contact with vehicles.
- **Four Tall Auxiliary Adapters - 5.0 in. (127 mm)** (5215759). For positioning the height of the Auxiliary Adapters to make better contact with vehicles. (not shown in below illustration).

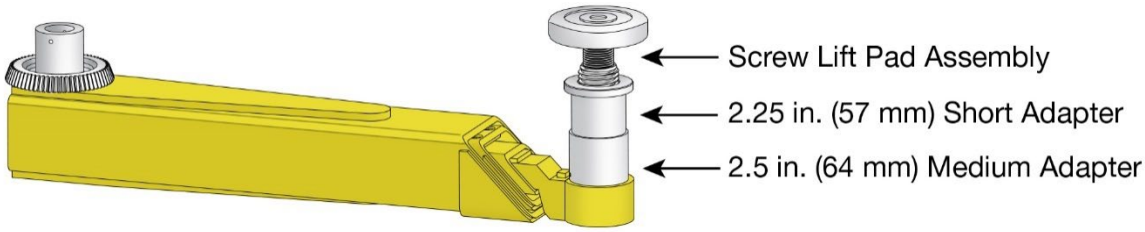

⚠ **WARNING** Auxiliary Adapters can be stacked, but only up to 9 in. (229 mm). Stacking Auxiliary Adapters above 9 in. (229 mm) can cause the vehicle to become unstable and slip off the Lift, possibly damaging both the Lift and the vehicle, and injuring anyone under or around it.

⚠ **WARNING** Use the correct Adapters. Do not attempt to lift trucks or other frame type vehicles with standard Rubber Contact Pads.

⚠ **WARNING** Never use the Lift with missing or damaged rubber Contact Pads. Always replace Rubber Contact Pads when worn or damaged.

Quick-Fit Slotted Pinch-Weld Pucks or Pads — Always use slotted Pinch-Weld Pucks (5210263) or slotted Pinch-Weld Pads (5210254) when lifting vehicles on manufacturer approved pinch-weld jacking points. These convenient tear-resistant urethane adapters simply fit over the existing round Contact Pads.

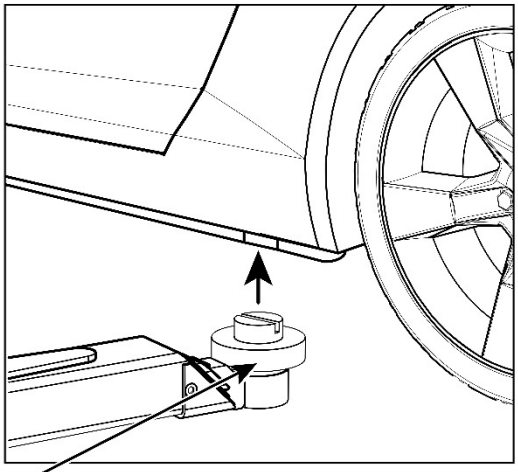

Always use slotted Pinch-Weld Pucks or Pads when lifting vehicles on manufacturer-approved pinch-weld jacking points.

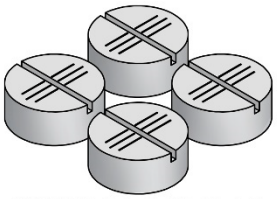

5210254 Set of 4 Slotted Pads

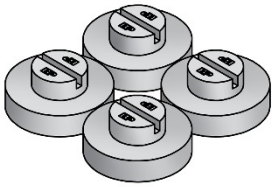

5210263 Set of 4 Slotted Pucks

Frame Cradle Adapters - Required for use when lifting trucks, vans or other frame vehicles that require additional stability. (5215761). Sold in sets of 4.

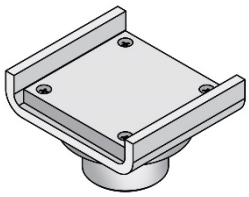

Wide Frame and Super Wide Frame Cradle Adapters - Recommended for use when lifting heavy-duty, wide frame vehicles. **Wide Frame** version fits Frames up to 5.25 in. (133 mm) (5215828).
Super Wide Frame version fits Frames up to 6.5 in. (165 mm) (5210253).

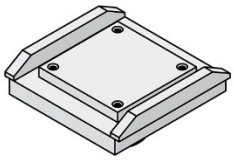

Wide Frame Cradle Adapter

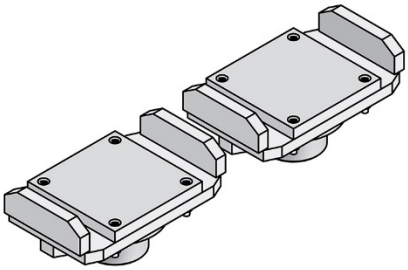

Super-wide Frame Cradle Adapter

Steel Lift Pads - Recommended for additional stability for all vehicles. The flanged edges grip the chassis for an extra-secure hold. (5215763) Set of 4

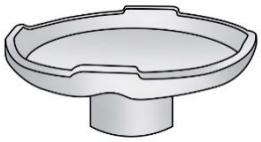

Replacement Polyurethane Tuf Pads™ - Never use the Lift with missing or damaged Rubber Contact Pads. Always replace Pads when worn or damaged. (5700227) set of 4.

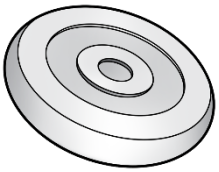

Adapter Tray - Adapter Trays allow for convenient storage of Auxiliary Adapters near the Lift Arms.

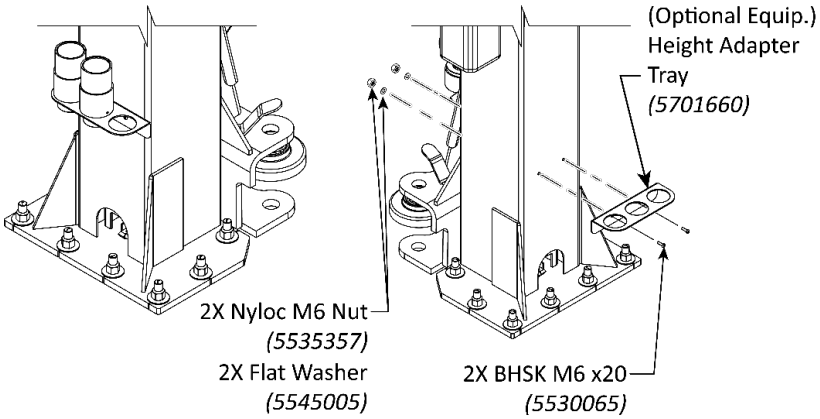

Visit **BendPak.com** for accessories and replacement Parts information at **(800) 253-2363** (follow the prompts). Please have the model and serial number of the Lift available.

Raising a Vehicle

This section describes how to raise a vehicle on the 10AP Series Two-Post Lift.

⚠ **WARNING** Never raise a vehicle whose weight exceeds the rated capacity of the Lift. Do not leave the controls until the Lift is engaged on a Safety Lock position or fully lowered. Only trained personnel should raise and lower the Lift.

⚠ **WARNING** Always stay within the Safe Operator Area when using the Lift. Refer to the illustration below. The safe operator area will keep the operator clear of crushing, shear and pinch points while providing an unobstructed line of sight to the vehicle and access to the Lift's controls. Personnel near the Lift, but outside of the Safe Operator Area, should be a minimum of 30 ft. (9.14 m) away.

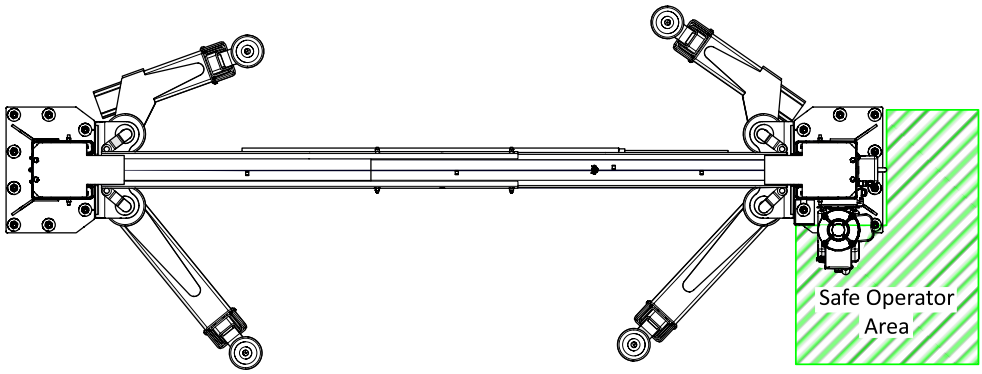

To raise a Vehicle:

1. Verify all four Lift Arms are on the ground, in their full drive-through positions, and all personnel are clear of the service bay.
2. Check under the vehicle to be lifted for its frame type and then put the most appropriate Pads/Adapters on the Lift Arms.

   When lifting a sedan or a vehicle with a unibody construction, a Screw Lift Pad is generally the best choice. When lifting an SUV, truck, or other vehicle with a frame construction, a Frame Cradle Pad is recommended.

⚠ **WARNING** Always use the Pad/Adapter type best suited for the vehicle being raised. Using the wrong Adapter type could cause the vehicle to become unstable on the Lift.

3. Drive the vehicle into the service bay.

⚠ **CAUTION** When driving a vehicle into position, keep to the middle of the area between the Posts. Hitting a Lift Arm or any other portion of the Lift could damage the vehicle and/or the Lift.

4. Once satisfied with the location of the vehicle, put it in park, engage the parking brake, and turn off the engine.

   If the vehicle has a manual transmission, put it into first gear.
5. Driver and passengers must all exit the vehicle prior to operating the Lift. Open the doors carefully.
6. Locate the manufacturer's recommended Lifting Points for the vehicle being raised.

If the operator is unsure where the Lifting Points are, consult *Vehicle Lifting Points for Frame Engaging Lifts*, which was provided with the Lift, or the manufacturer of the vehicle. If *Vehicle Lifting Points for Frame Engaging Lifts is no longer available*, contact BendPak Support email **support@bendpak.com** or call **(888) 856-5820** and follow the prompts to secure a replacement copy.

Some vehicles may have the manufacturers' recommended Service Garage Lift Point locations identified by a triangle mark on the underside of the vehicle, reference SAE J2184- (Current Edition). On some vehicles, specific Lifting Points are indicated by a label located on the driver's side door jamb.

⚠ **DANGER** ***The manufacturer's recommended Lifting Points must be used***. Otherwise, the vehicle could become unstable and fall, which could damage the vehicle and/or the Lift, or injure or even kill anyone under the vehicle.

⚠ **WARNING** Many specialty or modified vehicles, or vehicles with unusually short or long wheelbases cannot be raised on a two-post frame engaging lift. Contact the vehicle's manufacturer for raising or jacking guidance.

The illustration on the next page shows typical lifting points based on vehicle frame types.

Typical Lifting Points

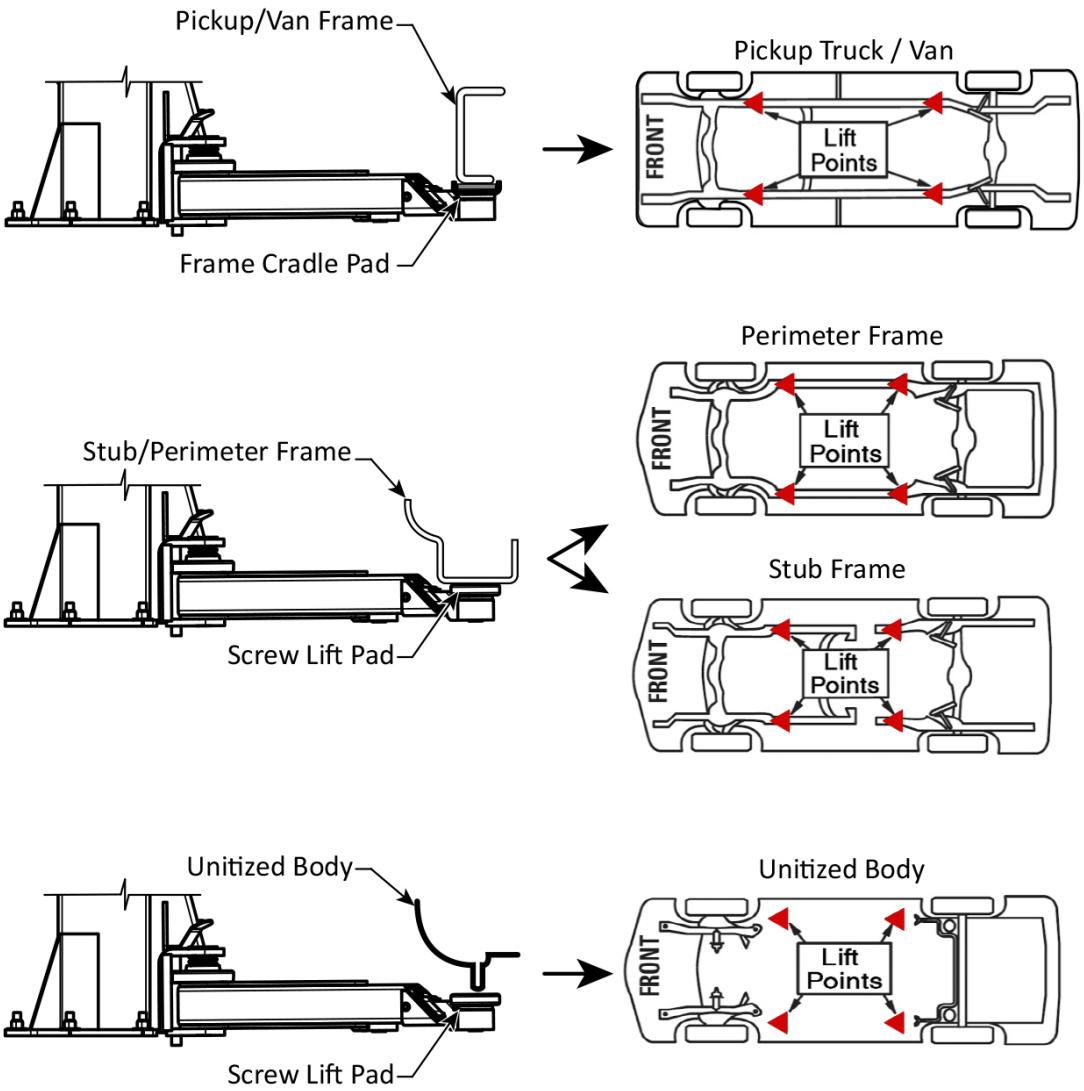

⚠ **WARNING** Before attempting to lift a vehicle verify:

- The vehicle frame is strong enough to support its weight and has not been weakened or compromised by modification, damage, or corrosion.
- The vehicle's individual axle weights do not exceed one-half of the Lift's capacity.
- All- Lift Pads/Adapters are in secure contact with the Frame at the vehicle manufacturers' recommended Lift Points.
- The vehicle is stable on the Lift and the center of gravity has not shifted, causing the vehicle to be off-balance.
- The overhead switch bar will contact the highest point on the vehicle.

⚠ **WARNING** Always use Safety Stands when removing or installing heavy components that may affect the vehicle's center of gravity.

7. Adjust the Lift Arms until the Pads/Adapters are ***directly under*** the Lifting Points for the vehicle being raised. If necessary, use the included Auxiliary Adapters for extra height.

   The vehicle's Lifting Point locations and center of gravity will determine if the Lift is configured in an Asymmetric or Symmetric Configuration. See illustration below.

   - In an Asymmetric configuration the centerline of the vehicle is behind the Lift Posts.
   - In a Symmetric configuration the centerline of the vehicle is lined up at the Lift Posts.

Asymmetric Configuration

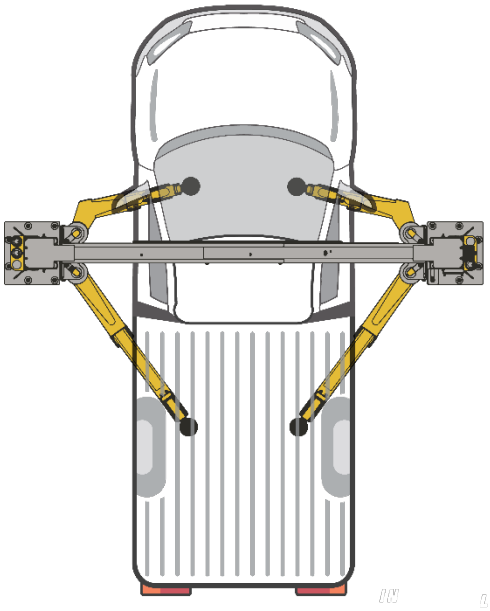

Symmetric Configuration

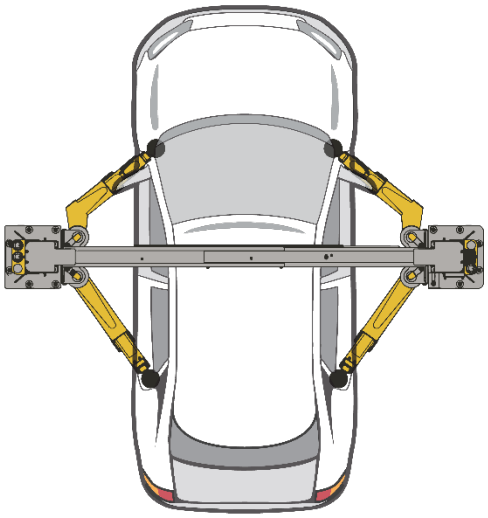

Illustrations for reference only – do not scale.

8. Raise the Lift until ***just before*** the Pads/Adapters contact the Lifting Points.
9. Check the Arm Restraint Gears on all four Lift Arms to make sure they are engaged.

   If they are not engaged, move the Lift Arms back and forth until they engage.
10. Raise the Lift until the tires of the vehicle are a few inches off the ground.
11. Verify all four Pads/Adapters are making solid contact with the Lifting Points.

    If any of the Pads/Adapters are ***not*** making solid contact with the Lifting Points, carefully lower the Lift and start over again. The Pads/Adapters ***must*** make solid contact with all Lifting Points.
12. Gently rock the vehicle to make sure it is stable and balanced.
    - If the vehicle is ***not*** stable and balanced, lower the Lift back to the ground and start over.
    - If the vehicle ***is*** stable and balanced, it can be raised to the desired height.

⚠ **DANGER** Do not raise the Lift further until it is certain that the vehicle on the Lift is both stable and balanced. If the vehicle is ***not*** stable and balanced, it could fall, which could damage the vehicle and/or the Lift, as well as injure or kill anyone underneath.

⚠ **WARNING** Always keep a line of sight on the Lift. Ensure personnel and objects are always clear of the Lift.

⚠ **WARNING** Remain clear of the elevated Lift until visual confirmation is made that all Safety Locks are fully engaged, and the Lift is lowered onto the Safety Locks.

13. Press and hold the **Up** Button.
14. Listen as the Lift passes the Safety Locks. A “thump” sound should be heard as each side passes by the Safety Locks at approximately the same time.
15. When the vehicle reaches the desired height, go up and past the next Safety Lock position (listening for the thump as it passes), then release the **Up** Button.
16. *Press and hold* the Lowering Handle, which lowers the Lift onto the Safety Lock position just passed. Do ***not*** hold the Safety Lock Release Handle, which is for lowering the Lift to the ground.
17. When the Lift stops moving down, it is engaged on its Safety Locks. Release the Lowering Handle.

    Do not leave the Lift controls unless the Lift is engaged on its Safety Locks or fully lowered.
18. Recheck the Pads/Adapters to make sure they are all still making solid contact with the Lifting Points.
19. Verify the Lift is engaged on the ***same Safety Lock*** on both Posts.

⚠ **DANGER** Always ensure both Safety Locks are engaged. If the Lift Heads are engaged on Safety Locks at two different heights or only one Safety Lock is engaged, the vehicle could become unbalanced and fall, causing damage, injury, or death.

20. The vehicle is now ready for service.

To raise the Lift:

1. Press and hold the **Up** Button.
2. When the Lift is just past desired height, release the **Up** Button.
3. Press and hold the Lowering Handle.

   Do not pull down on the Safety Lock Release Handle or the Lift will continue to lower and will not engage on its Safety Locks. When the Lift engages on its Safety Locks and stops moving, release the Lowering Handle.

   Only leave the Lift on its Safety Locks or fully lowered.

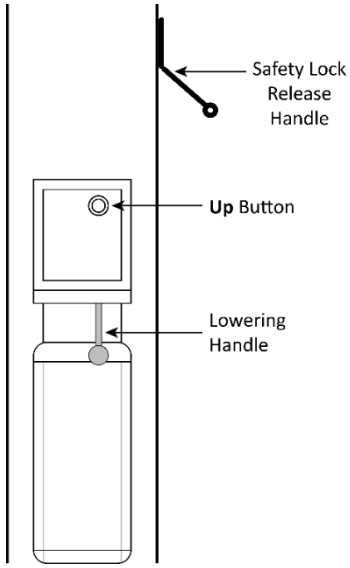

To lower the Lift:

1. Press and hold the **Up** Button for two to three seconds.

   This moves the Lift off its Safety Locks.
2. Pull down and hold Safety Lock Release Handle and Lowering Handle.

   The Lift begins lowering.
3. When the Lift is fully lowered, release the Safety Lock Release Handle and the Lowering Handle.

   Only leave Lift on Safety Locks or fully lowered.

Lowering a Vehicle

To lower a vehicle, first raise the Lift a small amount, to get it off its Safety Locks, then lower it.

To lower a vehicle:

1. Check under and around the vehicle to make sure the area is clear of all obstructions.

   If any obstructions are found, ***move them out of the way***.

2. Press and hold the **Up** Button for a second or two to move the Lift off its Safety Locks.

   Raise the Lift at least 2 in. (51 mm) to get clear of the Safety Locks.

3. Pull down and hold the Safety Lock Release Handle (on the power side post above and to the right of the Power Unit).
4. Push and hold the Lowering Handle (on the front of the Power Unit). The Lift will begin lowering.

NOTICE Both the Safety Lock Release Handle ***and*** the Lowering Handle must be held down at the same time to lower the Lift.

⚠ **DANGER** Do not override the Lift controls. For safety purposes, the Lift controls are designed to stop the Lift if released. Overriding the Lift controls could lead to damage to the Lift, damage to the vehicle on the Lift, injury, or in rare cases, death to persons near the Lift.

⚠ **CAUTION** Remain clear of the Lift as it comes down. Obey the pinch point warning decals.

5. When the Lift is on the ground, release both Handles, then move all four Lift Arms to their full drive-through positions to allow an unobstructed exit for the vehicle.
6. Carefully drive the vehicle out.

About Safety Locks

A Safety Lock ***position*** is defined as when the Lift is engaged on both Safety Locks at the same height on both Posts. Having multiple Safety Lock positions allows the Lift to be locked at the best height for the service to be performed.

⚠ **CAUTION** Verify that both Safety Locks are engaged at the same height on both Posts. The Lift must not be engaged on Safety Locks at two different heights or the Safety Lock on one Post engaged but the Safety Lock on the other Post not engaged.

Safety Lock positions are created by the Safety Lock Weldments, which are on the back of each Lift Head. Safety Lock Weldments hit the Safety Locks and then move past them as the Lift Heads rise.

Passing: **Between Weldments**: **Engaged**:

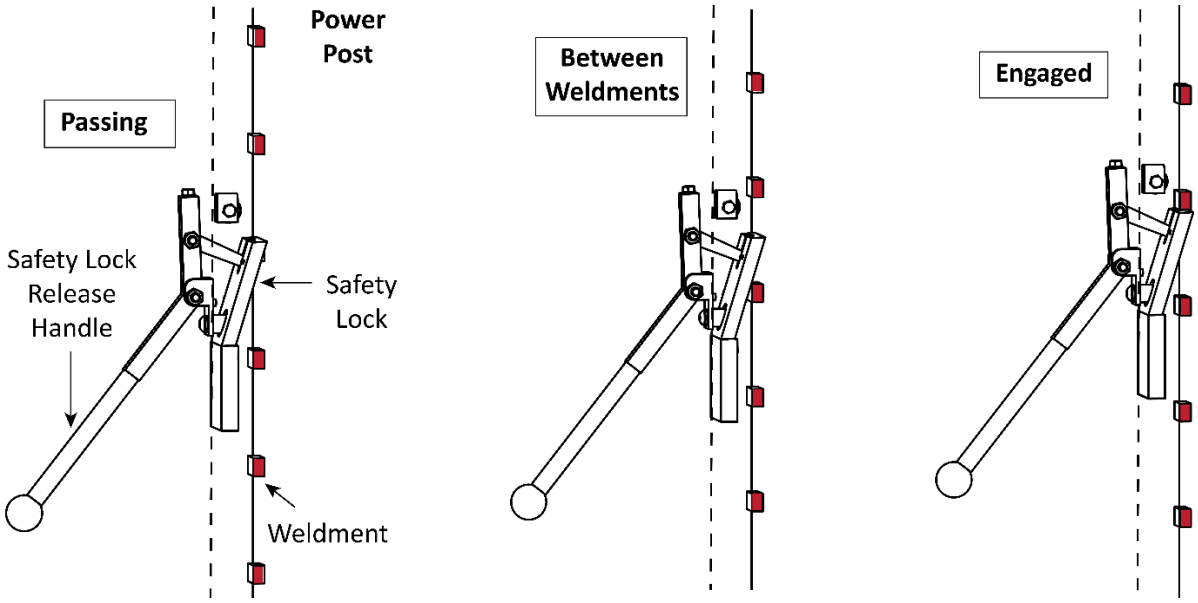

Components removed for clarity. Offside Safety Lock not shown. Reference only – do not scale.

As they move past the Safety Locks, the Weldments push the Safety Lock and the Safety Lock Release Handle down. When the Weldment is completely past the Safety Locks, the Safety Lock Spring pulls the Lock back into place. This happens each time Safety Locks are passed, so multiple thumps can be heard as the Lift rises and lowers.

To engage the Lift on a Safety Lock position, press the **Up** Button and wait until the vehicle reaches the desired height for the service to be performed, then listen for the thump as the Weldments pass the next Safety Lock position. After the thump, release the **Up** Button and then hold down the Lowering Handle (on the front of the Power Unit) for a second or two, to back the Weldments down onto the just-passed Safety Locks. ***Do not*** hold down the Safety Lock Release Handle.

⚠ **WARNING** Only leave the Lift either fully lowered or engaged on Safety Locks. ***Leaving the Lift raised but not engaged on Safety Locks means the vehicle is not secure***. It could fall, possibly damaging the vehicle and/or Lift, and injuring anyone underneath.

Maintenance

⚠ DANGER Before performing any maintenance on the Lift, verify it is completely disconnected from power. The Lift uses electrical energy, and if the organization has Lockout/Tagout policies, make sure to implement them before performing any maintenance. Coming into contact with high voltage can cause severe injury or even death.

⚠ DANGER Do not use the Lift if the cables are damaged or extremely worn. If a vehicle is raised when damage or extreme wear is noticed, very carefully lower the vehicle to the ground. When the Lift is on the ground, remove it from service, disconnect it from power and make arrangements for repair.

⚠ DANGER Always wear proper Personal Protective Equipment (PPE) when working with hydraulics. Gloves and Safety Glasses are a minimum requirement. Keep all parts of the body away from suspected leaks. Use a clean piece of sheet metal to pass along hoses and fittings to detect leaks. Shut down the equipment if a leak is detected.

⚠ WARNING Do not operate the Lift if maintenance issues are found. Instead, remove it from service and have it serviced. Technical support and service is available from the dealer, on the Web at **bendpak.com/support**, by email at **support@bendpak.com**, or by phone at **(888) 856-5820** (follow the prompts). Online chat is also available at **www.bendpak.com** click the chat icon.

Read the Installation and Operation manual and understand how the equipment operates before using, maintaining, or repairing the Lift. Routine maintenance and adjustments are the responsibility of the owner/user and are not covered under warranty.

Routine maintenance and adjustments should be carried out on a regular basis as outlined below. *Unless stated otherwise, all maintenance may be performed by the owner/employer and does not require trained lift service personnel*. Replace worn, damaged or broken parts with original BendPak or BendPak approved parts or with parts that meet or exceed the original specifications.

Maintenance and Interval Recommendations:

The Lift's service life is dependent on the level and frequency of care and maintenance provided. By simply following a few guidelines, the life of the Lift can be increased by many years. The following care and maintenance procedures not only help to foster that but also aid by ensuring safe operation and early detection of problems.

Tools required:

- Open-end wrench set (SAE & Metric)
- Screwdrivers (Phillips and Slotted)
- Hydraulic fluid (same type and weight as the current fluid in use.)
- Clean shop towels
- Hex key set
- Lubricants
  - White lithium multi-purpose lubricant
  - Red lithium grease
  - ALMASOL Wire Rope Lubricant or 90W gear oil

The following maintenance and interval recommendations are based on typical workday use and operation.

Daily Maintenance

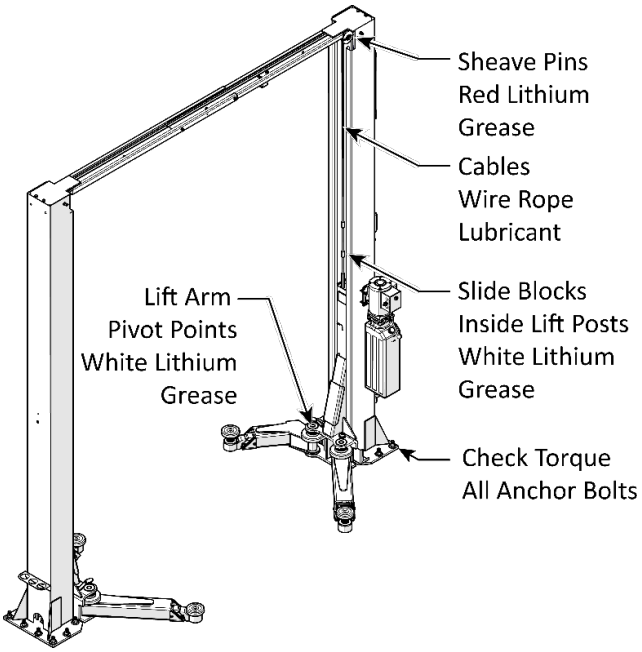

7. Keep the Lift and work area clean, to promote both safety and better problem visibility.

8. Visually inspect that the Safety Locks and controls are in good operating condition. Do not use the Lift if the Safety Locks or controls are damaged or excessively worn.

9. Check the hydraulic fluid level in the Reservoir. Add fluid, if necessary.

10. Check for hydraulic fluid leaks on hoses, fittings, and cylinders. Inspect for damage. Hose covers that are cut, cracked, blistered, show signs of abrasion, kinking or flattened are to be replaced. Cylinder ports that are cracked, show signs of leaking or other damage.

11. Start the hydraulic system and lift the Arms slightly to apply pressure. Pass a clean piece of sheet metal near the hydraulic hoses, fittings, and cylinders. Hydraulic fluid on the metal indicates a leak. Shut down the system and lockout/tagout the Lift to prevent use until repaired.

12. Verify the cylinder clamp is in place and tight on the hydraulic cylinder just above the Lift Head.

13. Raise the Lift to its highest position daily, to extend Cylinder and Seal life.

Monthly Maintenance

1. Remove, clean, and apply new red lithium grease to all Cable Sheave Pins as outlined in the Lubrication Procedure.
2. Inspect the condition of all Equalizing Cables and mechanisms. Run a shop towel over the Cable surface while watching for snags. Replace as required.
3. Inspect all hydraulic hoses, fittings, and cylinders for damage and leaks.
4. Apply 90-WT gear oil or ALMASOL® Wire Rope Lubricant to both Equalizing Cables.
5. Apply white spray lithium multi-purpose grease to the four inside contact corners of both Posts.
6. Apply white spray lithium multi-purpose grease to all Lift Arm Pivot Points.
7. Inspect all Lift Arm Pins and locking mechanisms for damage and wear. Replace as required.
8. Verify all fasteners are torqued to specifications.
9. Verify all Warning labels are in good condition and legible.

Every Two Months

Verify all anchor bolts are secure and torque to 85-95 ft.-lbs.

Every three to five years or as required

1. Carefully check the Equalizing Cables for signs of damage or extreme wear. See **Wire Rope Inspection and Maintenance** for additional information.
2. Inspect and lubricate the Lifting Cables, Sheaves and Pins.
   If the Lift becomes inoperative in a raised position, refer to the **Troubleshooting** section.

Hydraulic System Maintenance

There is no scheduled replacement period on the hydraulic components in this system. All Hydraulic System components are considered “On Condition” maintenance. Inspect periodically as outlined in the previous maintenance section and replace as required.

⚠ **WARNING** BendPak Does not supply hydraulic fluid with the Lift. **Always** refer to the Material Safety Data Sheet (MSDS) for safe handling and disposal information. MSDS are available from the Hydraulic Fluid supplier or manufacturer.

⚠ **WARNING** Hydraulic fluid contains toxic components and must be disposed of in accordance with all national, state, and local regulations. See **Disposing of Used Hydraulic Fluid**. Wear appropriate personal protective equipment for working with hydraulic fluid including gloves, and safety glasses.

NOTICE! BendPak does not authorize field repair of the Power Units. Field adjustment of the Pressure Relief Valve (PRV) is not permitted.

The Hydraulic System on the Lift should be inspected as required, but at a minimum interval not to exceed one year. ***Repairs to the Hydraulic Power Unit and adjustments to the PRV are not authorized.*** Be advised there are no drains or test points in the hydraulic system.

Maintenance activities consist of:

1. Inspecting the Cylinder Rod.
2. Hydraulic fluid Inspection for contamination and verifying the Fill Level.
3. Inspecting and cleaning the Hydraulic Fluid filter.
4. Inspecting the Hydraulic Hoses and/or Lines.
5. Inspecting the Reservoir and Reservoir Cap.

⚠ **WARNING** The power unit on the Lift is a Hydraulic Pump capable of developing pressures in excess of 5,000 psi (345 BAR). A pressure relief valve is used to set the pressure at the desired level. Tampering with, adjusting, modifying, or removing the relief valve is extremely dangerous and is not permitted.

⚠ **WARNING** All hydraulic components on the Lift are assumed to be pressurized unless the Lift Arms have been lowered to the ground and the lowering handle (valve) has been held in for at least ten seconds in which case the entire system is considered depressurized.

Tools Required:

• Clean shop towels • Hydraulic fluid spill kit – shop towels and oil absorbent material • Clean, clear glass container to examine the fluid sample.	• Open end wrench set • Screwdrivers • Ladder • JIC fitting cap/plug	• Funnel • Clean tube to draw a fluid sample. • Waste fluid containers

Hydraulic Maintenance Start-up

1. Review the Installation and Operation Manual before attempting this procedure.
2. Read and understand all Danger, Warning, and Caution labels on the Lift. If any labels are illegible, contact BendPak to arrange for replacement labels to be sent.
3. Walk around the Lift and examine it carefully for damaged or worn mechanical components. If such components are found, have the problem components replaced or repaired.
4. Look for hydraulic fluid on the ground or the Lift—that could indicate a leak in the Hydraulic System.
5. Verify all hydraulic connections are tight.
6. Check the hydraulic fluid level in the Power Unit's Reservoir.
7. Remove the polyethylene Cover on each Lift Head—to enable a view of the Cylinder Rod.
8. Verify all Lift Arms are on the ground. Hold in the Lowering Handle (Valve) for ten seconds to verify there is no pressure in the system.
9. Verify the area is safe and all personnel are clear of the Lift and are in no danger from the Lift.
10. Move the Power Disconnect switch to the **On** position.
11. Verify power is supplied to the Lift by briefly pressing the up button. The Power Unit will start up.
12. Raise the Lift arms to the top Safety Lock with no load on the Lift.

Inspect the Cylinder Rod

1. A ladder may be required to access the top of the Lift Head. Visually inspect the Rod for wear, corrosion, and pitting. These conditions may lead to leaking seals and moisture intrusion into the hydraulic fluid. If any of these conditions are found, the cylinder may need to be replaced.

   Contact BendPak Support at **bendpak.com/support**, via email at **support@bendpak.com**, or by phone at **(888) 856-5820** (follow the prompts).

2. If the Cylinder Rod is in good condition, replace the polyethylene Cover and repeat the procedure on the remaining Lift Cylinder.
3. Lower the Lift's Arms until they rest on the ground.
4. Hold the Lowering Control in for about 10 seconds after the Lift Arms are resting on the ground to ensure the Hydraulic System is depressurized.
5. Turn the Lift's power switch to the **off** position. Lockout/Tag Out the power disconnect to prevent unintentional start up during the maintenance procedure.

Inspect the Hydraulic Fluid for Contamination and Fill Level

1. Remove the reservoir cap and draw a small sample of Hydraulic Fluid from the Power Unit. Use a small, clean tube to reach into the reservoir. Cover the end with a gloved thumb and remove a small sample. Place the sample into a clean, clear glass container.
2. Examine the Hydraulic Fluid sample visually.
   i. Clean hydraulic fluid ranges from almost clear to an amber color.
   ii. When the hydraulic fluid becomes dark, it should be drained from the system and replaced with new fluid.

iii. If solids are visibly suspended in the fluid, or found at the bottom of the container, the hydraulic fluid should be drained and replaced with new fluid.

iv. Fluid with a milk-like tint indicates water in the Hydraulic System. Remove all fluid from the system and replace it with clean hydraulic fluid.

v. A change in the smell of hydraulic fluid may indicate contamination. Excessive air trapped in the fluid may create nitrogen compounds which can emit a turpentine-like odor. If a distinct change in the odor of the fluid is noted, remove all fluid from the system and replace it with clean hydraulic fluid.

3. Verify the Fill Level by visually comparing the level inside the reservoir with the markings on the exterior of the reservoir.

Inspect the Hoses/Lines and Fittings

1. Inspect all Hydraulic Hoses for swelling, pinching, kinking, fraying, bubbling or other abrasions. Damaged hoses are to be replaced before they fail in service.
2. Inspect metal Hydraulic Lines for dents, and corrosion. Damaged Hydraulic Lines are to be replaced before they fail in service.
3. Inspect the Hydraulic Fittings to verify they are tight and undamaged. Tighten or replace as required.

Inspect the Reservoir and Cap

1. Reservoir caps are to be kept clean to prevent the migration of debris into the Hydraulic System.
2. Inspect the Cap and Reservoir for cracks, verify any filter material in the Cap is clean. Rinse in clean fluid, if required.
3. If the Reservoir, its cap, or seal is damaged, contact BendPak for replacement parts.

Draining The Hydraulic System

Draining the Hydraulic System and replacing the fluid should only be undertaken if the fluid is contaminated. There are no drain valves, test points or strainers with magnets on this Lift's Hydraulic System. Gather shop towels and oil absorbent material in case of fluid spills. BendPak suggests having an assistant available to aid in keeping fluid spills to a minimum.

1. Retrieve a container capable of storing the 3.6 gal. of Hydraulic Fluid from the system.
2. With the Lift Arms resting on the ground and the Power Disconnect in the off position, hold down the lower lever (valve) for about 10 seconds to verify the system is depressurized. All components of the Hydraulic System will be depressurized.
3. Open the system at the Hydraulic Hose Connected routed from the Power unit to the JIC Tee on the Power Side Post. Quickly plug the tee fitting with a JIC cap. Use Shop Towels to minimize any spilled hydraulic fluid.
4. Place the end of the hydraulic hose just removed from the tee into the waste fluid container.
5. Press the Raise button while holding the hose in the container. Release the button when air begins to escape the hose.
6. Place a small waste oil container near each cylinder. Open the JIC Connector on the offside Cylinder and place that end of the Hydraulic hose into the container. Cover the offside Cylinder JIC connector with a rag to absorb any fluid continuing to leak from the Cylinder.

7. Open the JIC hose connection on the Power Side Cylinder and place the hose end into the waste container to capture the fluid exiting the hose.

Inspect and Clean the Filter

1. An assistant is recommended for this inspection. Gather tools for removal and oil clean-up supplies in case of a spill.
2. Remove the Power Unit's Reservoir. The Reservoir is awkward to handle. Have an assistant support the Reservoir while it is loosened.
3. Remove the 100-mesh Filter at the bottom of the Suction Pipe.
4. Inspect the filter for debris. If excessive amounts of debris are found:
   i. Thoroughly rinse the Filter in clean hydraulic fluid to remove contaminants.
   ii. Dispose of the waste hydraulic fluid in accordance with national, state, and local regulations.
5. When the screen is clean, replace the filter on the suction pipe.
6. Use clean hydraulic fluid and shop towels to clean the Reservoir.
7. When the Reservoir is clean, re-install it onto the Power Unit.
8. Fill the Reservoir with clean hydraulic fluid.
9. Reconnect all Hydraulic Hoses and verify they are tight and undamaged.
10. Dispose of dirty shop towels and oil absorbent material in accordance with all national and local regulations.

Hydraulic System Spare Parts

10AP and 10APX Wide Configuration Hydraulic Hose Routing

Lift Model	10AP	10 APX
(Short) Hose A	5570277 (2,217 mm)	5570278 (2,522 mm)
(Med.) Hose B	5570279 (3,276 mm)	5570023 (3,588 mm)
(Long) Hose C	5570291 (6,960 mm)	5570293 (7,264 mm)
(Very Short) Hose D	5570314 (285 mm)	
Elbow Fitting	5550223	

10AP-168 and 10AP-181 Wide Configuration Hydraulic Hose Routing

Lift Model	10AP-168	10 APX-181
(Short) Hose A	5570277 (2,217 mm)	5570278 (2,522 mm)
(Med.) Hose B	5570279 (3,276 mm)	5570023 (3,588 mm)
(Long) Hose C	5570292 (8,178 mm)	5570095 (8,472 mm)
(Very Short) Hose D	5570314 (285 mm)	
Nipple Fitting	5550095	

10AP Series Narrow Configuration Hydraulic Hose Routing

Lift Model	10AP	10AP-168	10 APX	10APX-181
(Short) Hose A	5570277 (2,217 mm)		5570278 (2,522 mm)	
(Med.) Hose B	5570279 (3,276 mm)		5570023 (3,588 mm)	
(Long) Hose C	5570291 (6,960 mm)	5570292 (8,178 mm)	5570293 (7,264 mm)	5570095 (8,472 mm)

Fittings

Part Number	Description	Qty./Lift
5550113	FTG ELB -04 NPT L x -04 JIC	2
5550183	FTG ELB -06 JIC -06L ORB	1
5550003	FTG TEE -04JIC -04JIC -06JIC	1

10AP Lifting Cable Inspection and Maintenance

The 10AP Lifting Cables should be inspected regularly by following these steps:

- Lifting Cables should be replaced when there are visible signs of damage or extreme wear. ***Do not use the Lift if it has damaged or worn cables.***
- Lifting cables should be always maintained in a well-lubricated condition.

  Lifting Cables are fully protected when each wire strand is lubricated both internally and externally. Excessive wear shortens the life of the Lifting Cables. Use a wire-rope lubricant that penetrates to the core of the Lifting Cable and provides long-term lubrication between each individual strand, such as 90-WT gear oil or ALMASOL® Wire Rope Lubricant.

  To make sure that the inner layers of the rope remain well lubricated, lubrication should be carried out at intervals not exceeding three months during operation.
- All sheaves and guide rollers in contact with the moving rope should be given regular visual checks for surface wear and lubricated to make sure they run freely. This operation should be carried out at appropriate intervals generally not exceeding three months during operation.

  For all sheave axles, use standard wheel bearing grease. For all sheaves and/or guide rollers, use 90-WT gear oil or a similar heavy lubricant, applied by any method including pump/spray dispensing, brush, hand, or swabbing.
- How often should the cables be inspected?

  Lifting Cables should be visually inspected at least once each day when in use, as suggested by American Petroleum Institute's Recommended Practice 54 guidelines. Any Lifting Cables that have met the criteria for removal must be immediately replaced.
- When should the Lifting Cables be replaced due to broken wires?

  Lifting cables should be removed from service when there are six randomly distributed broken wires within any one lay length, or three broken wires in one strand within one lay length.

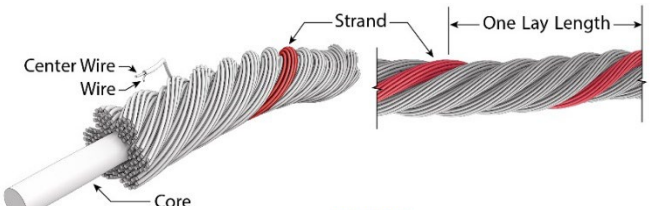

- Are there other reasons to replace lifting cables?
  - Yes. Corrosion that pits the wires and/or connectors, evidence of kinking, crushing, cutting, bird-caging, or a popped core, wear that exceeds 10% of a wire's original diameter, or heat damage.
  - Yes. Over-stretched cables require replacement. The Lift should be inspected daily, and the cables adjusted as needed to maintain level lifting. The cables should be replaced well before running out of adjustment at the Lift Head.

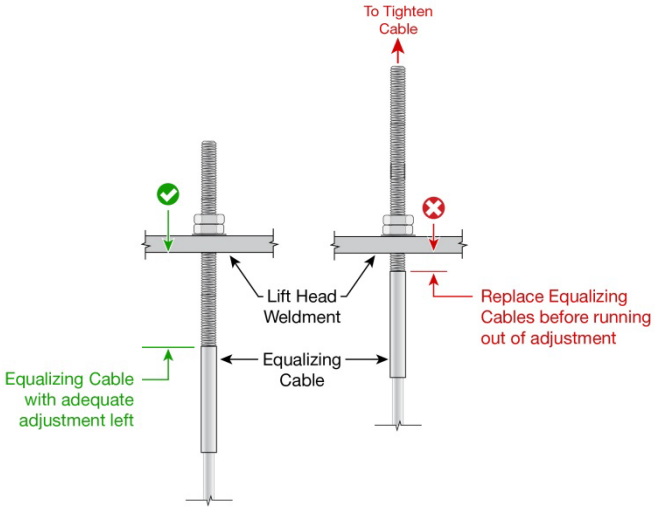

  a. See page 53 for more information on leveling.

Torque Chart

FASTENER TORQUE CHART

	Bolt Grade (SAE)	SAE Grade 0-1-2			SAE Grade 5			SAE Grade 8			Socket Head Cap Screw SAE Grade		
	Bolt Class (Metric)	4.6	Metric Class 4.6		8.8	Metric Class 8.8		10.9	Metric Class 10.9		12.9	Metric Class 12.9	
Bolt Size (SAE)	Bolt Size (Metric)	Tightening Torque			Tightening Torque			Tightening Torque			Tightening Torque		
		Lubricated (ft-lbs)	Zinc Plated (ft-lbs)	Plain & Dry (ft-lbs)	Lubricated (ft-lbs)	Zinc Plated (ft-lbs)	Plain & Dry (ft-lbs)	Lubricated (ft-lbs)	Zinc Plated (ft-lbs)	Plain & Dry (ft-lbs)	Lubricated (ft-lbs)	Zinc Plated (ft-lbs)	Plain & Dry (ft-lbs)
1/4-20	M6 x1.0	2.3	2.6	3.0	5.8	6.6	7.7	8.3	9.4	11.1	9.7	11.0	13.0
5/16-18	M8 x 1.25	3.8	4.3	5.0	9.7	11.0	13.0	13.9	15.8	18.5	16.3	18.4	21.7
3/8-16	M10 x 1.50	10.8	12.3	14.4	27.9	31.6	37.2	39.9	45.2	53.2	46.7	52.9	62.2
7/16-14	N/A	24.0	27	30.0	35.0	42	50.0	55.0	59	70.0	61.0	68	76.0
1/2-13	M12 x 1.75	18.9	21.4	25.2	48.7	55.1	64.9	69.6	78.9	92.8	81.4	92.2	108.5
9/16-12	M14 x 2.00	30.2	34.2	40.2	77.8	88.1	103.7	111.3	126.1	148.4	130.0	147.4	173.4
5/8-11	M16 x 2.00	47	53	62	121	137	161	173	196	230	202	229	269
3/4-10	M18 x 2.50	65	73	86	167	189	222	239	270	318	279	316	372
7/8-9	M22 x 2.50	136	155	182	320	365	430	460	515	600	510	575	640

WARNING! Prior to Installation, inspect all accompanying manuals, parts lists and catalogs to ensure you have all the necessary parts. Identify all fasteners and their proper torque settings as illustrated on this chart. Proper torquing practices cannot be over emphasized. Torque values are provided as a convenient method of achieving correct pre-loading of highly stressed fasteners. If the fasteners are not properly plated, the fastener threads are not clean and free of deformation, or are not properly lubricated, the correct fastener pre-load will not be achieved even though the given torque value is reached. For this reason, it is critical that all fasteners be inspected for proper plating, thread form and correctly lubricated prior to torquing. Failure to verify a fastener's serviceability or to correctly lubricate the fastener prior to assembly and torquing will result in the fastener not being properly pre-loaded and subsequent failure of the fastener may occur. The torque values can only be achieved if the nut (or tapped hole) has a proof load greater than or equal to the bolt's minimum ultimate tensile strength. Clamp loads estimated as 75% of proof load for specified bolts. Torque values are listed in foot-pounds. Torque wrenches should be calibrated on an annual basis. Never use an impact driver on a torque multiplier.

Troubleshooting

This section describes how to troubleshoot the 10AP Lift.

NOTICE If the Lift is not functioning correctly, it must be taken out of service until it is fixed.

Important: Replace worn, damaged or broken parts with original BendPak or BendPak approved parts or with parts that meet or exceed the original manufacturer specifications.

⚠ **DANGER** Before performing maintenance on the Lift, verify it is disconnected from power. The Lift uses electrical energy. If the organization has Lockout/Tagout policies, implement them before performing any maintenance. Anyone coming into contact with high voltage could be injured or killed.

Issue	Action to Take
Lift becomes inoperative in a raised position.	Verify there is sufficient Hydraulic Fluid in the reservoir. Verify the Lift Carriages are above and clear of the Safety Locks. Verify none of the Hydraulic Hoses are pinched or leaking. Verify the Power Unit is being supplied power. Make sure the Lift is not overloaded. Make sure the load on the Lift is balanced. Contact **bendpak.com/support**. or by phone at **(888) 856-5820** (follow the prompts).
Arms move erratically or squeak when in use.	Move the Lift Arms up and down a few times to flush any residual air from the Hydraulic System.
Offside Lift Head will not lower.	See broken Safety Cable procedure below.
Lift does not stay up.	Make sure to leave the Lift engaged on its Safety Locks. Check for Hydraulic Fluid leaks.
Vehicle on Lift not level.	Make sure Lift is engaged on Safety Locks at the same height. Make sure the Safety Locks in both Posts are engaged. If either condition is not met, carefully lower the vehicle back down to the ground and raise it again.
Motor not running.	Check connection to power source; make sure it is plugged in and the appropriate voltage. Check wiring diagram on Power Unit.
Hydraulic Fluid is dirty.	Replace the dirty Hydraulic Fluid with clean, approved ATF fluids, such as Dexron VI, Mercon V, Mercon LV, or comparable.
Lift makes odd noises.	Lubricate hinge points using white lithium grease.

Technical support and service is available from the dealer, on the Web at **bendpak.com/support**, by email at **support@bendpak.com**, or by phone at **(888) 856-5820** (follow the prompts). Online chat is also available at **www.bendpak.com** click the chat icon.

Broken Safety Cable Procedure

If the Safety Cable breaks, the corresponding Lift Head will lower, but the other will not.

To release the Offside Safety Lock:

1. Raise the Lift Heads off the Safety Locks.
2. Have an assistant reach through the access hole with a stiff wire or pick to pull the Safety Block away from the Lift Head. See illustration below.
3. Hold in the Safety Release on the power side Lift Post while holding the lower handle on the Power Unit.
4. When the Lift Heads are on the ground and the Lift is in a safe condition, disconnect the power from the Lift and replace the Safety Cable.

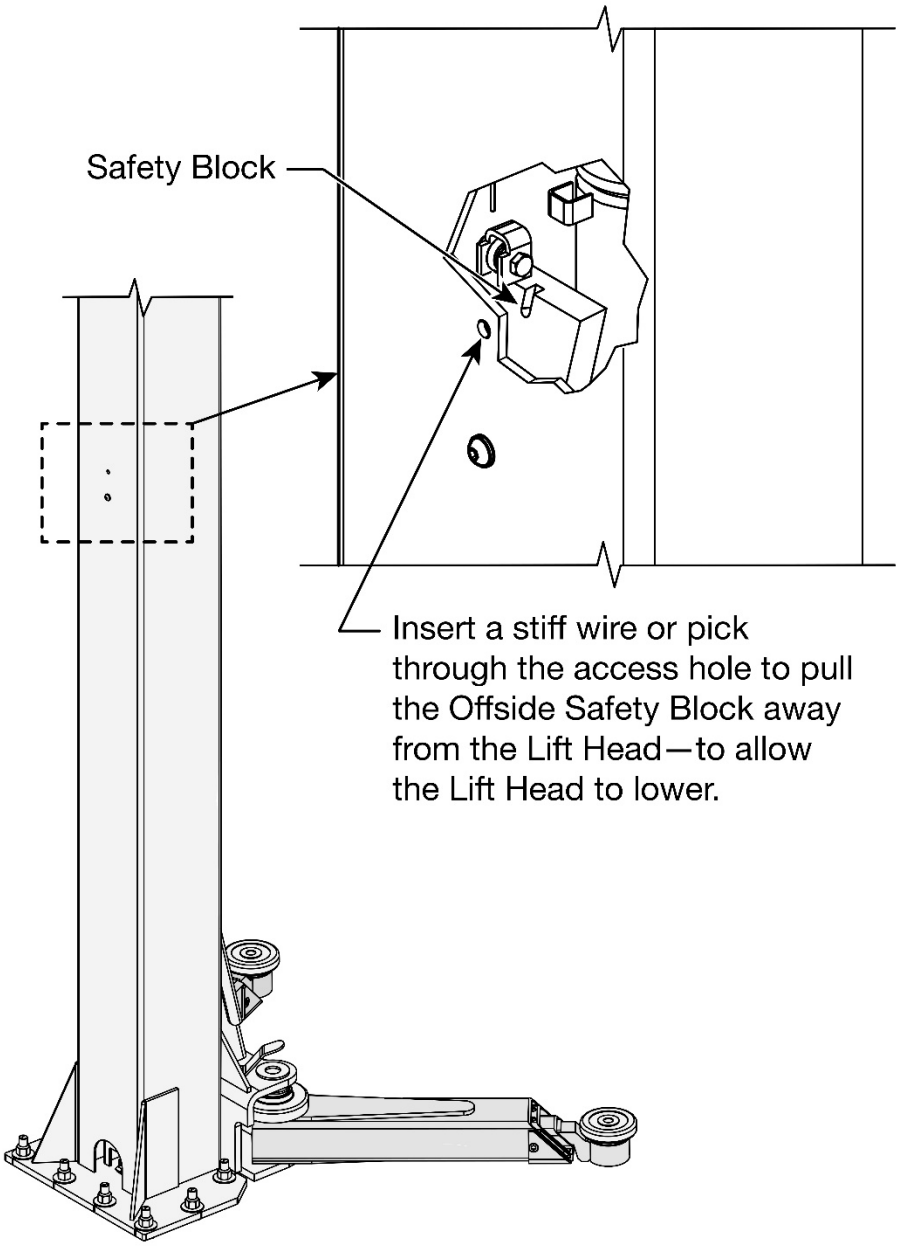

Reference only – do not scale.

Troubleshooting Lift Arm Lock Disengagement

⚠ **WARNING** Avoid excessive Shim heights! A new concrete cutout and steel reinforced pour are recommended to correct out of level conditions in excess of 3 degrees.

Some floors with excessive out of level conditions may require Shim heights that reach or exceed .5 in. (12.7 mm). When the Shim Height reaches this level, the Lift Arm Lock Pins may not function to disengage the Lift Arms when completely lowered. To correct this condition, the Arm Lock Pins include an M12 x 1.75 internal thread, approximately .5 in. (12 mm) deep. A mating M12 Hex Head Bolt with Lock Washers, or a backing nut (not supplied) may be used to extend the contact point of the Arm Lock Pins. Adjust the Bolt head position to disengage the Lock as required. Refer to the illustration below.

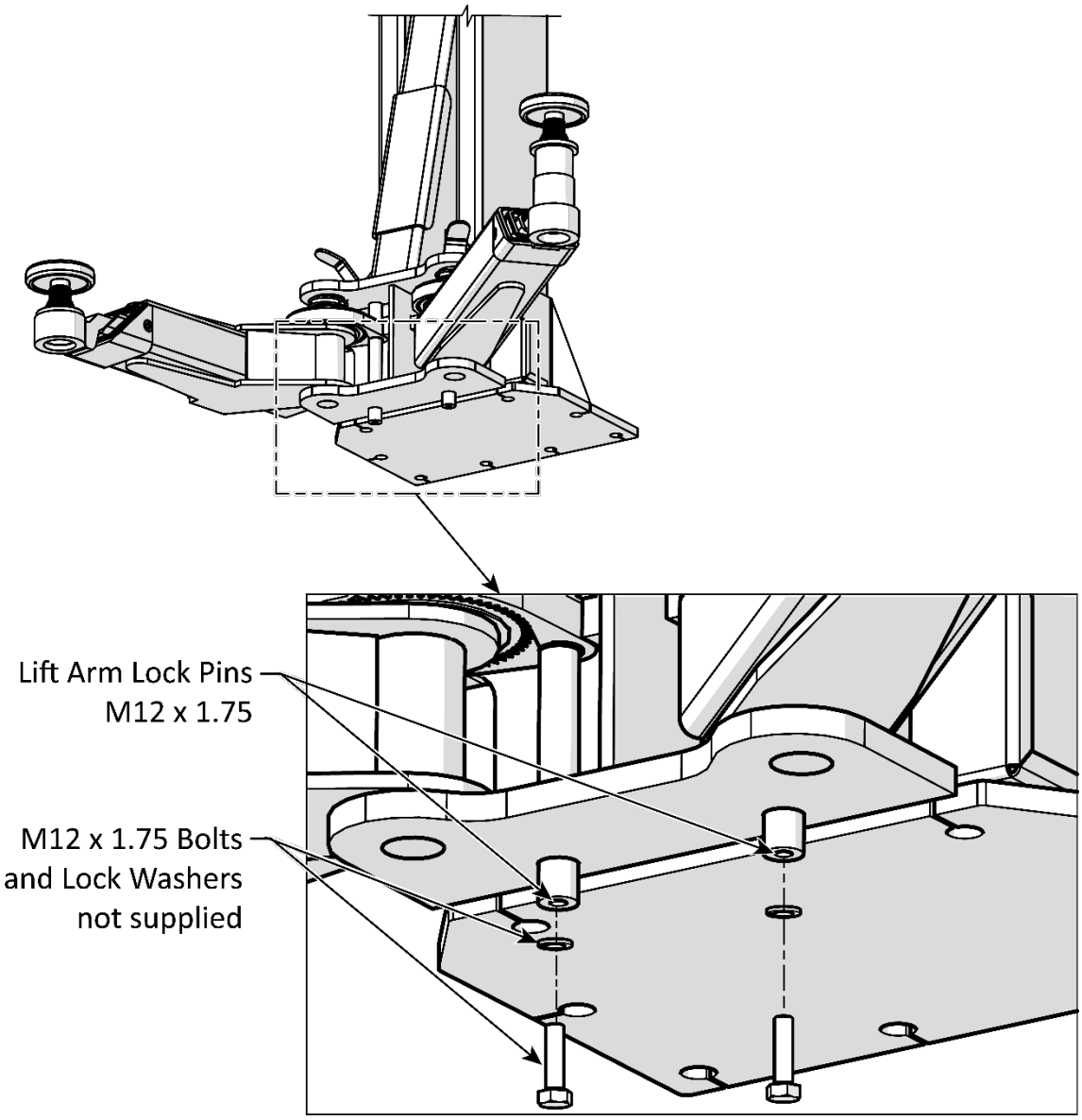

Optional Adapters Shown

Disposing of Used Hydraulic Fluid

Used hydraulic fluid must never be disposed of by dropping it into the trash or dumping into the street. Hydraulic fluid has toxic ingredients that are harmful to the environment. Either recycle the hydraulic fluid or drop it off at a hazardous waste collection facility. Dirty or contaminated fluid must be treated as hazardous waste. Shop towels and/or granular absorbents that have soaked up hydraulic fluid should also be treated like hazardous waste and be disposed of at a hazardous waste collection facility.

To find an appropriate facility:

- Local automotive parts stores, auto care facilities, or automobile dealerships may accept fluid for recycling or, in some cases, for disposal. Contact them for more information.
- Cities, counties, and states often support both recycling facilities and hazardous waste collection facilities. Contact them to see if and where they have these programs.

If an appropriate facility cannot be found, the website **earth911.com** has resources that may be of help.

10AP Lift Disposal - End of Service Life

Once the 10AP Lift has reached the end of its service life it must be disposed of properly. Metal recyclers will be able to advise on methods and costs to remove the Lift and will reuse the materials, diverting them from landfills. The best option is to contact a metal recycling center and discuss the size and weight of the Lift to determine if the facility can deconstruct and recover the usable components and metals.

The hydraulic cylinders, hoses, fittings, and the power unit itself must be disposed of in accordance with current national, state, and local regulations governing the use and disposal of hazardous materials. These components and any used hydraulic fluid must not be disposed of by dropping it into the trash or dumping it into the street. The hydraulic fluid contains toxic ingredients that are harmful to the environment.

These components and the hydraulic fluid are required to be recycled or must be delivered to a hazardous waste collection facility.

For large amounts of hydraulic fluid, consider contacting a commercial waste disposal company. In all cases, the best approach is to find an appropriate facility and contact them—in advance—and ask them what kinds of fluids and materials they accept, what kind of containers they must be in, what hours they are open, their location, and any other information specific to their facility.

If an appropriate facility cannot be found, the website **earth911.com** has resources that may be of help.

Wiring Diagrams

This section includes wiring information for the Single-Phase Old-Style Micro Switch

Single Phase Old Style Micro Switch

⚠ **DANGER** All wiring ***must*** be performed by a licensed electrician in accordance with all local and national electrical codes. Make sure that main electrical power has been disconnected from the Lift and cannot be re-energized until all procedures are complete.

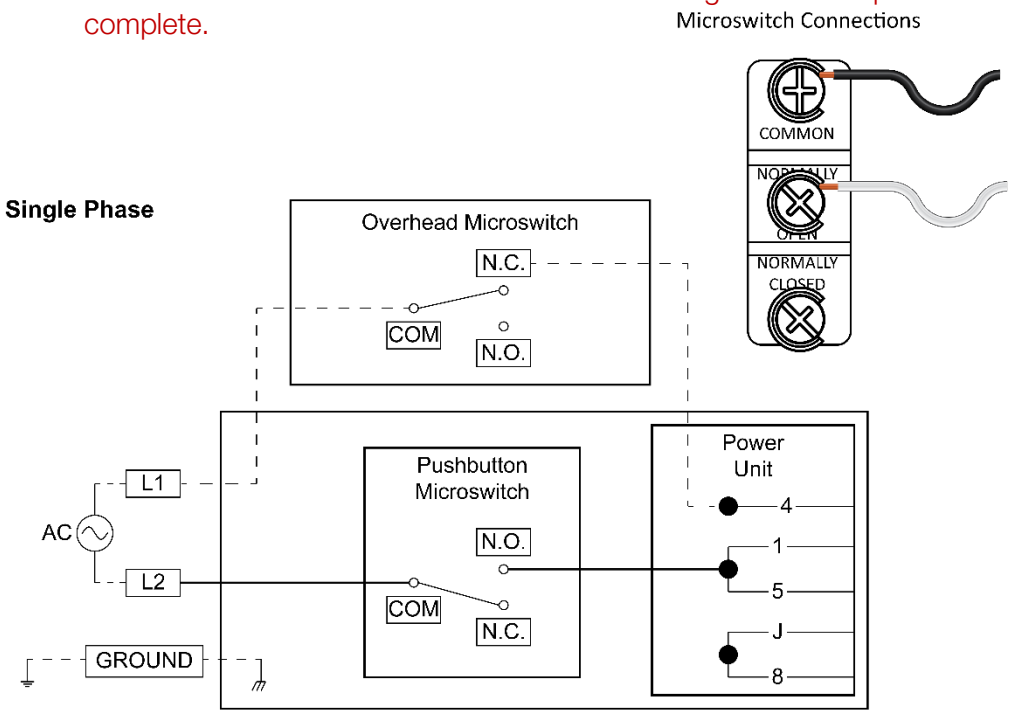

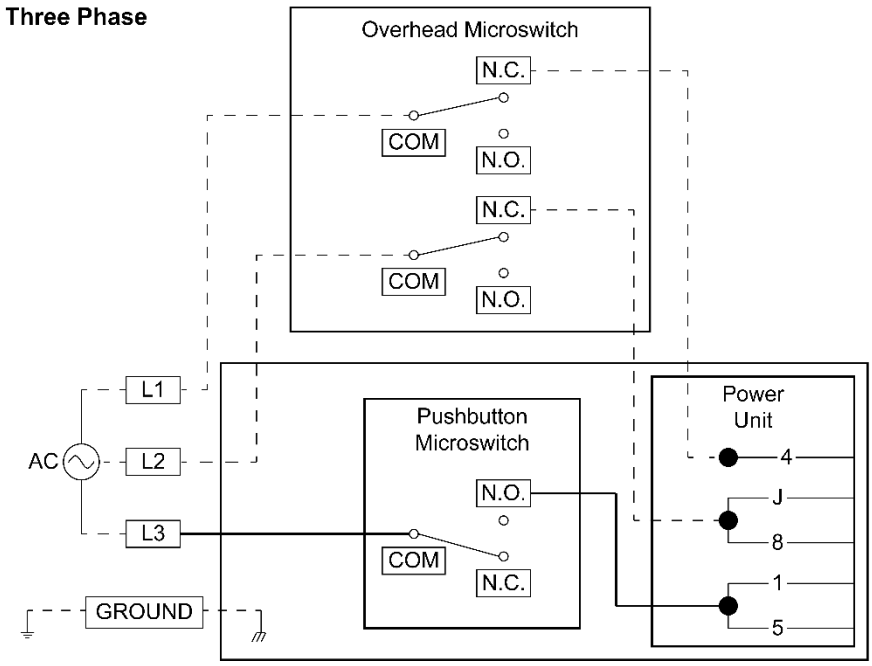

Single Phase Limit Switch

This section includes wiring information for the single-phase new style Overhead Limit Switch.

⚠ **DANGER** All wiring ***must*** be performed by a licensed electrician in accordance with all local and national electrical codes. Make sure that main electrical power has been disconnected from the Lift and cannot be re-energized until all procedures are complete. If the organization has lockout/ tagout policies, make sure to implement them after connecting the Lift to power.

IMPORTANT! The Power Unit Consumes 19.5 Amps at 208-230 VAC, 50/60 Hz., single phase. The electrical circuit should be protected by a 25 Amp circuit breaker or time-delay fuse.

To Connect the Limit Switch (Single Phase):

1. Remove and retain the three Cover Screws.
2. Remove and retain the Switch Cover.
3. For Single Phase installations, feed the SJO 14-2 cord through the Strain Relief in the Switch Cover.
4. Strip the insulation off two of the conductors and connect to the ***Normally Closed Terminals***. One wire to terminal 21 and the other to terminal 22.
5. Inspect to verify no stray wire strands are bridging across the terminals. If any strands are bridging, correct before proceeding.
6. Replace the Switch Cover and secure with the three screws removed in step 1.
7. Replace the switch on its bracket on the Overhead assembly.
8. Connect into to the Power Unit electrical wiring to interrupt power when the Limit Switch is triggered. See **Power Unit Wiring**.

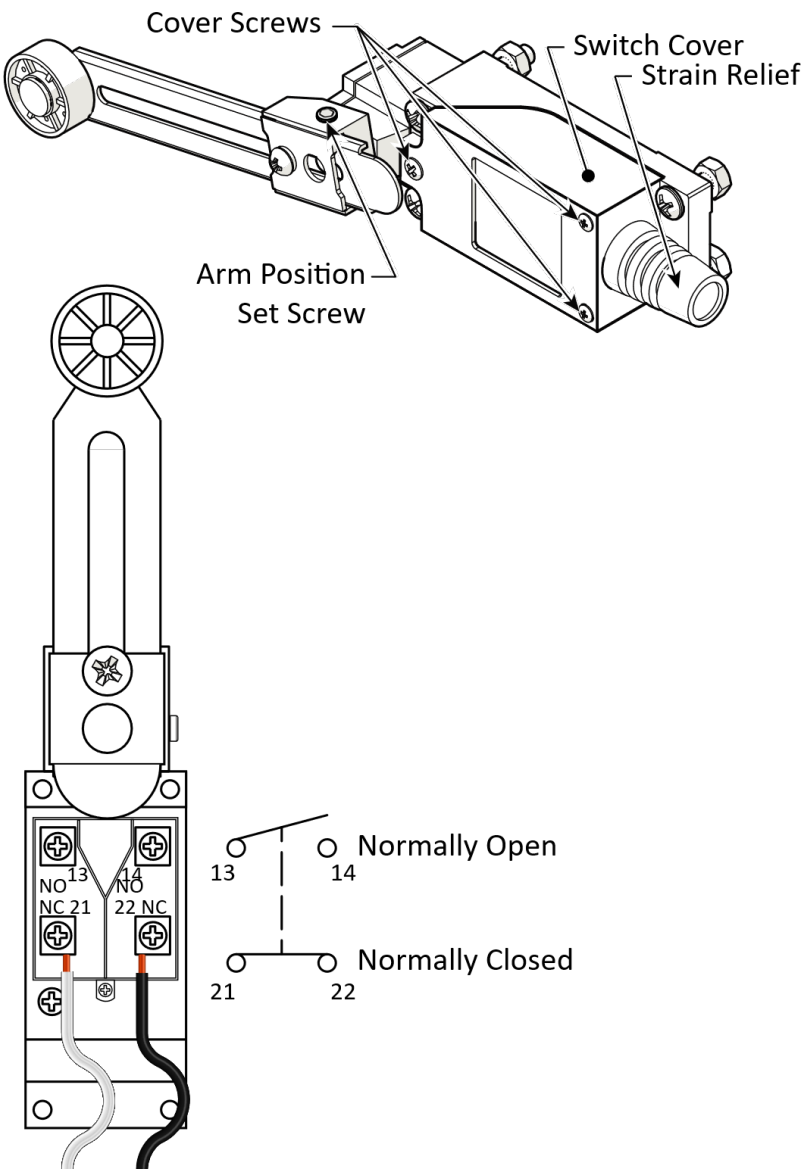

Power Unit Wiring Block Diagram Single Phase

IMPORTANT! The **Power Disconnect** and **Thermal Disconnect** (if required) are not included with the 10AP Lift. These two items must be supplied and installed by a licensed electrician in accordance with national (NEC), state, and local electrical codes.

Single-Phase Block Diagram

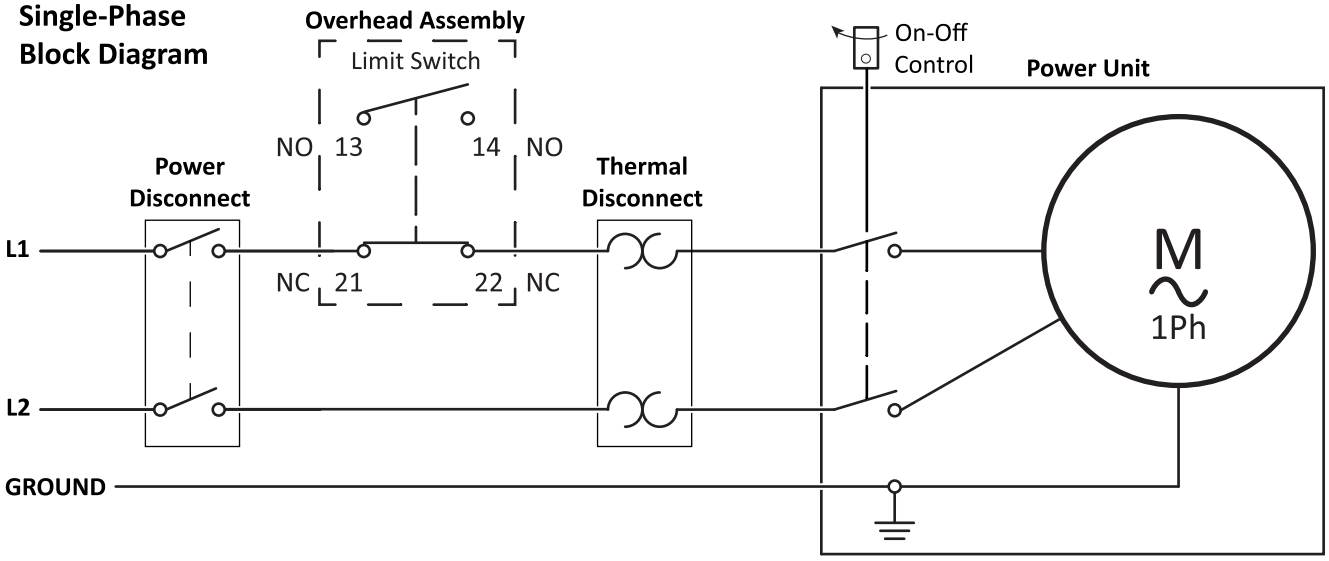

Each Power Unit must be protected by a 25 Amp time delay fuse or circuit breaker.

Power Disconnect and Thermal Disconnect, if required, are to be supplied and installed by a licensed Electrician.

Power Unit 5585285

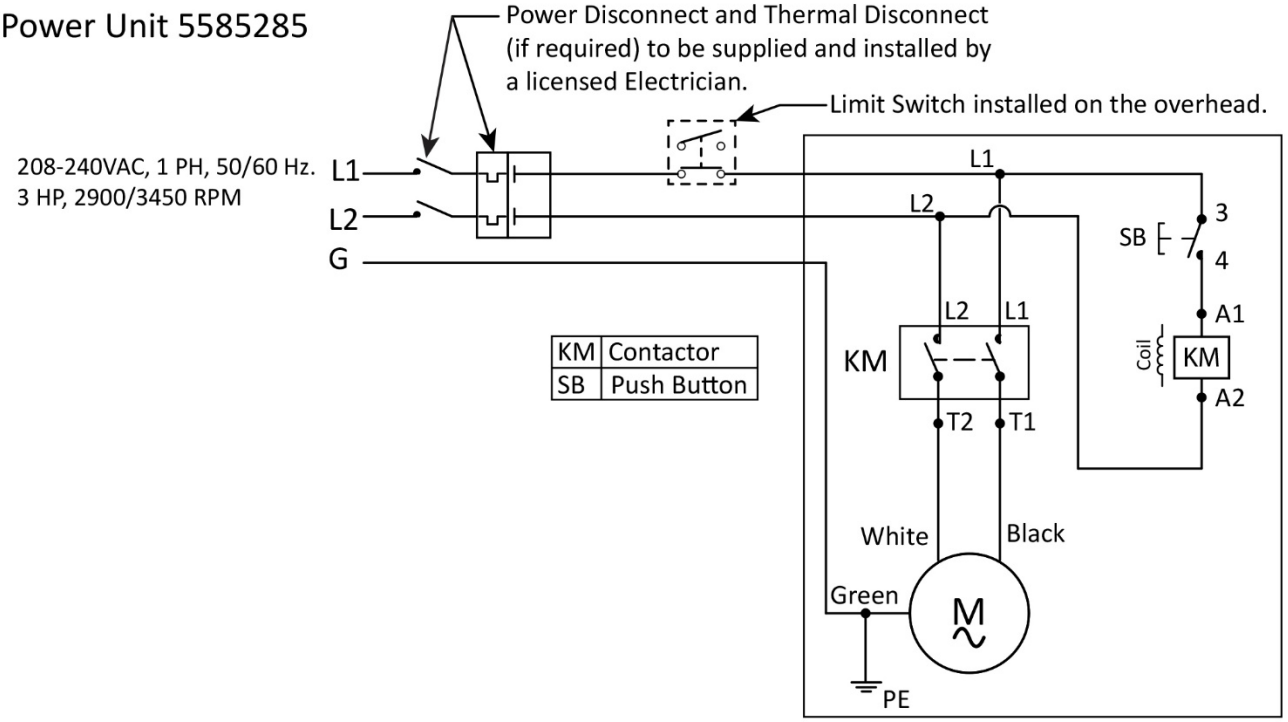

Power Unit 5585785

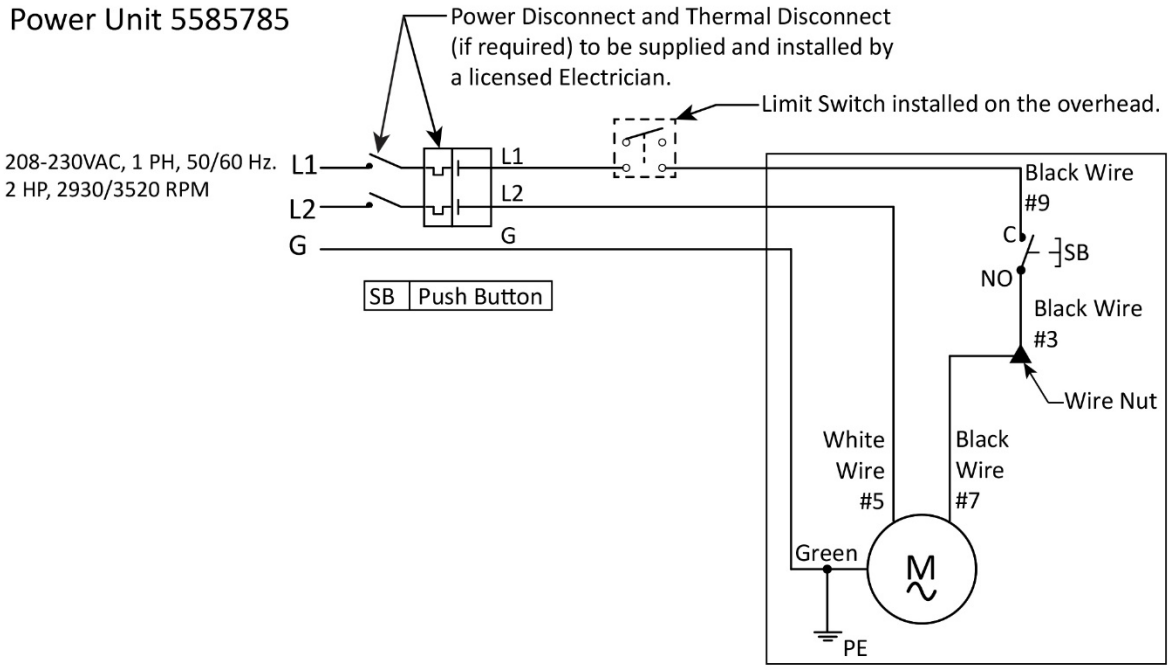

Power Disconnect and Thermal Disconnect, if required, are to be supplied and installed by a licensed Electrician.

Power Unit
5585685

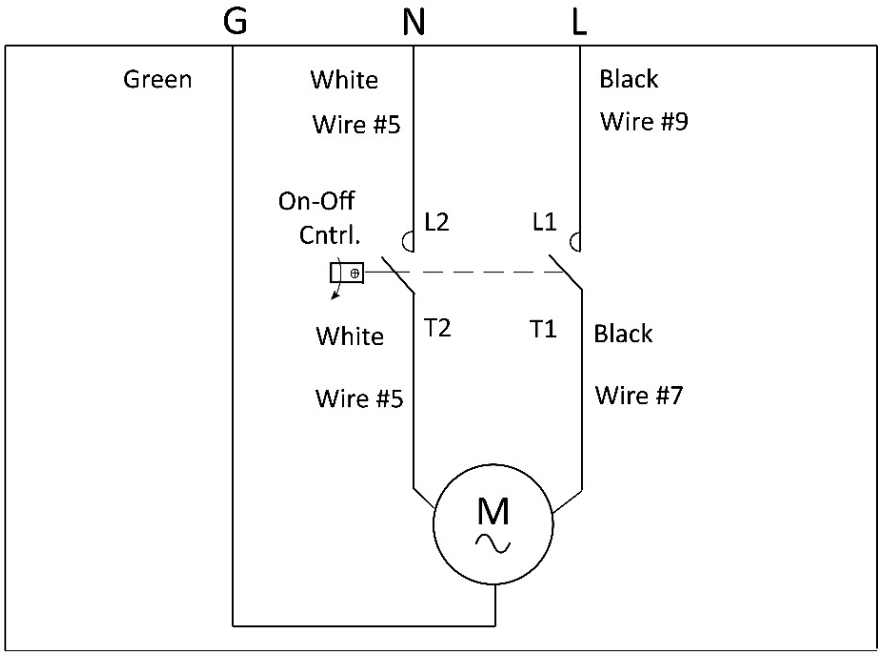

Power Unit Motor
208-230V, 1PH, 50/60 HZ,
2880/3450rpm, 5HP, CSA approved

Wiring Three-Phase Limit Switches

This section includes the wiring information for the Three Phase Overhead Limit Switches. It requires the **AP Clear Floor 3ph Micro Switch Kit, part number 5216263**.

⚠ **DANGER** All wiring ***must*** be performed by a licensed electrician in accordance with all local and national electrical codes. Make sure that main electrical power has been disconnected from the Lift and cannot be re-energized until all procedures are complete.

To Wire the Limit Switches (Three Phase):

9. Remove and retain the three Cover Screws on both Limit Switches.
10. Remove and retain the Limit Switch Covers.
11. Strip back the Jacket of the 14/4 cable about 5 in. (127 mm) to expose the 4 conductors.
12. Push the black and white wires through the strain relief on one Switch Cover and the red and brown through the Strain Relief on the remaining Cover.
13. Strip the insulation back on all four conductors about 1/2 in. (13 mm) and connect one wire to each side of the *Normally Closed Terminals* on each switch. Refer to the diagram below. Inspect to verify no stray or broken wire strands are bridging across the terminals.
14. Replace the Switch Covers and secure with the three screws removed in step 1.

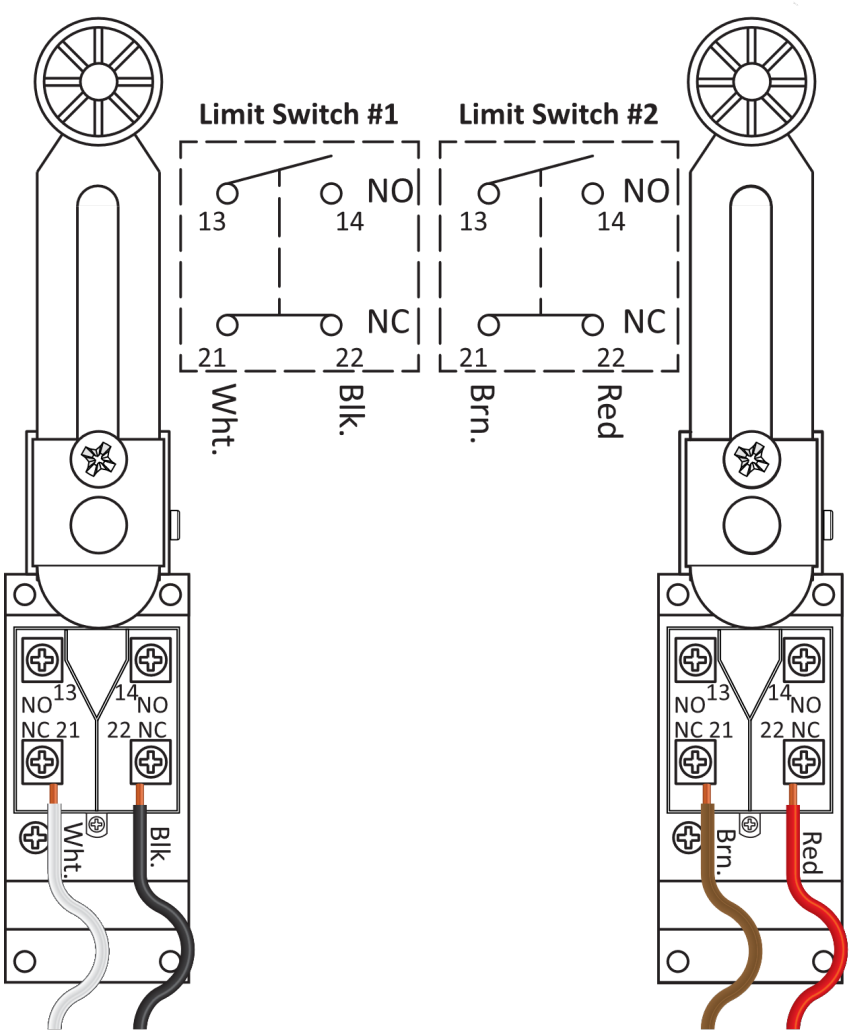

15. Secure the Switches to the bracket on the Overhead assembly. Refer to the illustrations below.

16. Attach the 3-Phase Limit Switches to the Lift's Overhead Assembly using the fasteners described below.

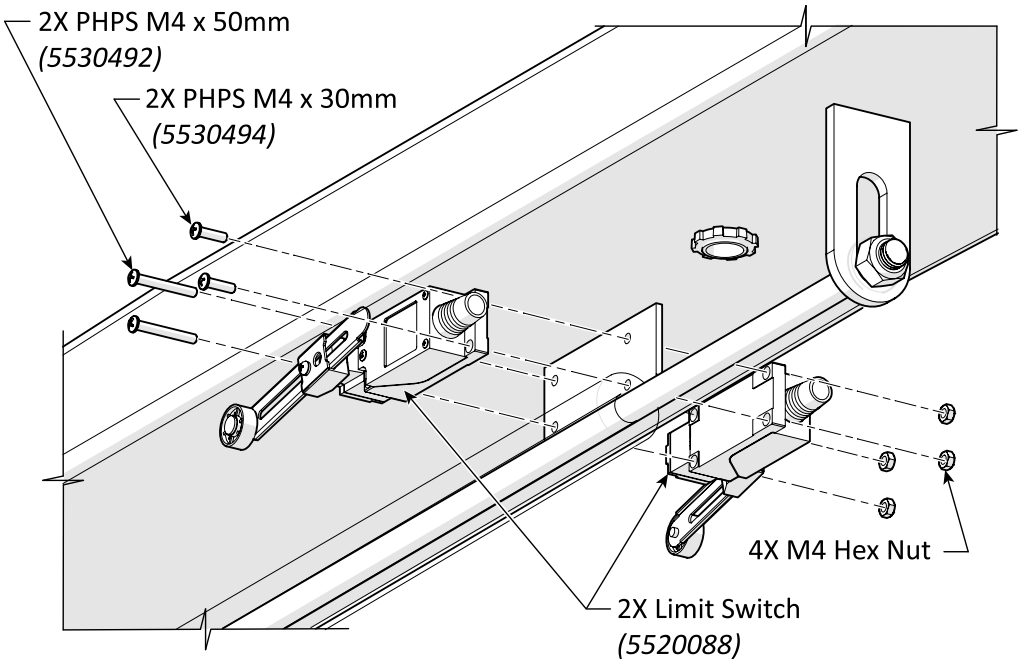

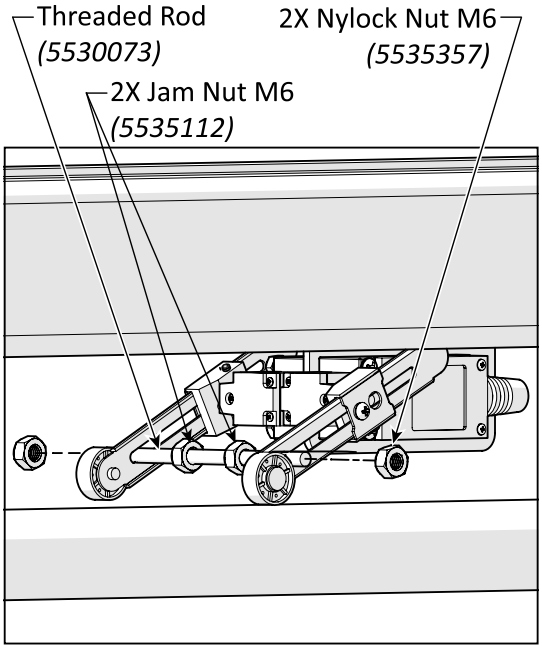

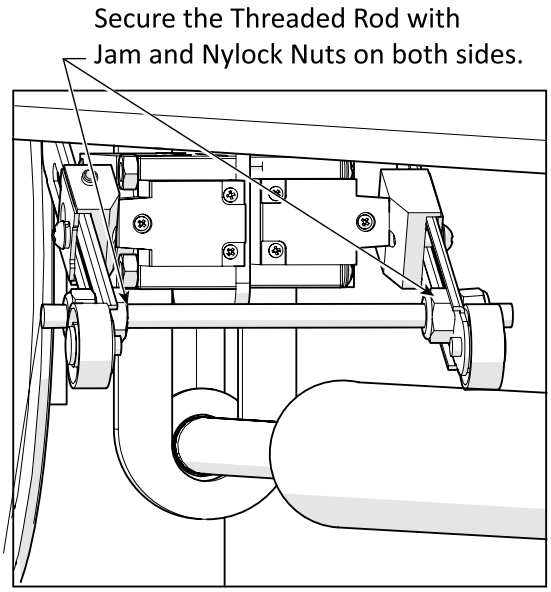

Wiring and components removed for clarity.

17. Assemble the Threaded Rod Spacer between the Actuator Arms and secure with the Jam Nuts as shown above.

18. Loosen ***BOTH*** Arm Rotation Set Screws and allow the Actuator Arm to rest on the Limit Switch Stop Bar. Adjust the length of the Actuator Arm, if required.

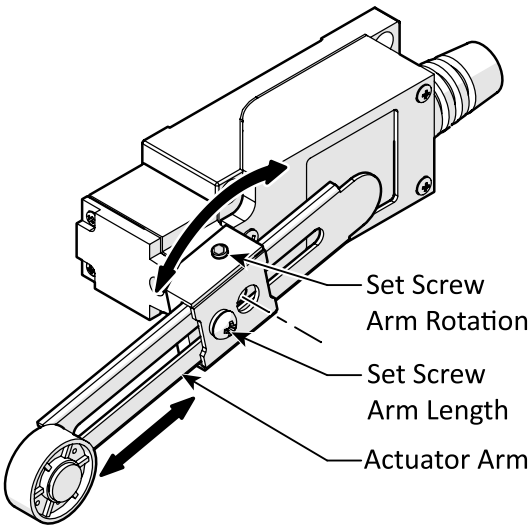

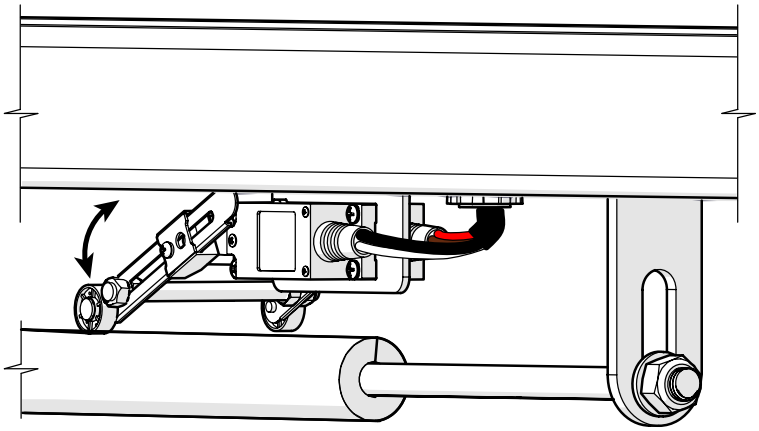

19. Tighten the Arm Rotation Set Screws on ***BOTH*** Limit Switches.

20. Push up on the Limit Switch Stop Bar. The Limit Switches should rise and fall with the Stop Bar.

21. Feed the 14-4 Cable up through the Cable Connector and secure using the connector's two screws.

22. Route the 14-4 Cable through the Cable Clips across the Overhead and down the Power Side Lift Post.

23. Bend the Cable Clips to secure the cable flat against the Overhead and the Lift Post.

24. Verify the Cable is held firmly in the Cable Clips and has little to no slack inside the Lift Post. Excessive slack could interfere with moving components inside the Lift Post leading to Cable damage and malfunction.

25. Feed the 14-4 Cable out through the grommets below the Safety Lock Release.

Three-Phase Power Unit Wiring

IMPORTANT! The Power Disconnect and Thermal Disconnect are not supplied with this Lift. These components must be supplied and installed by a licensed electrician in accordance with the National Electrical Code (NEC). The Thermal Disconnect, while not an NEC requirement, may be required by local electrical code.

⚠ **DANGER** All wiring ***must*** be performed by a licensed electrician in accordance with all local and national electrical codes. Make sure that main electrical power has been disconnected from the Lift and cannot be re-energized until all procedures are complete.

Three-Phase Block Diagram

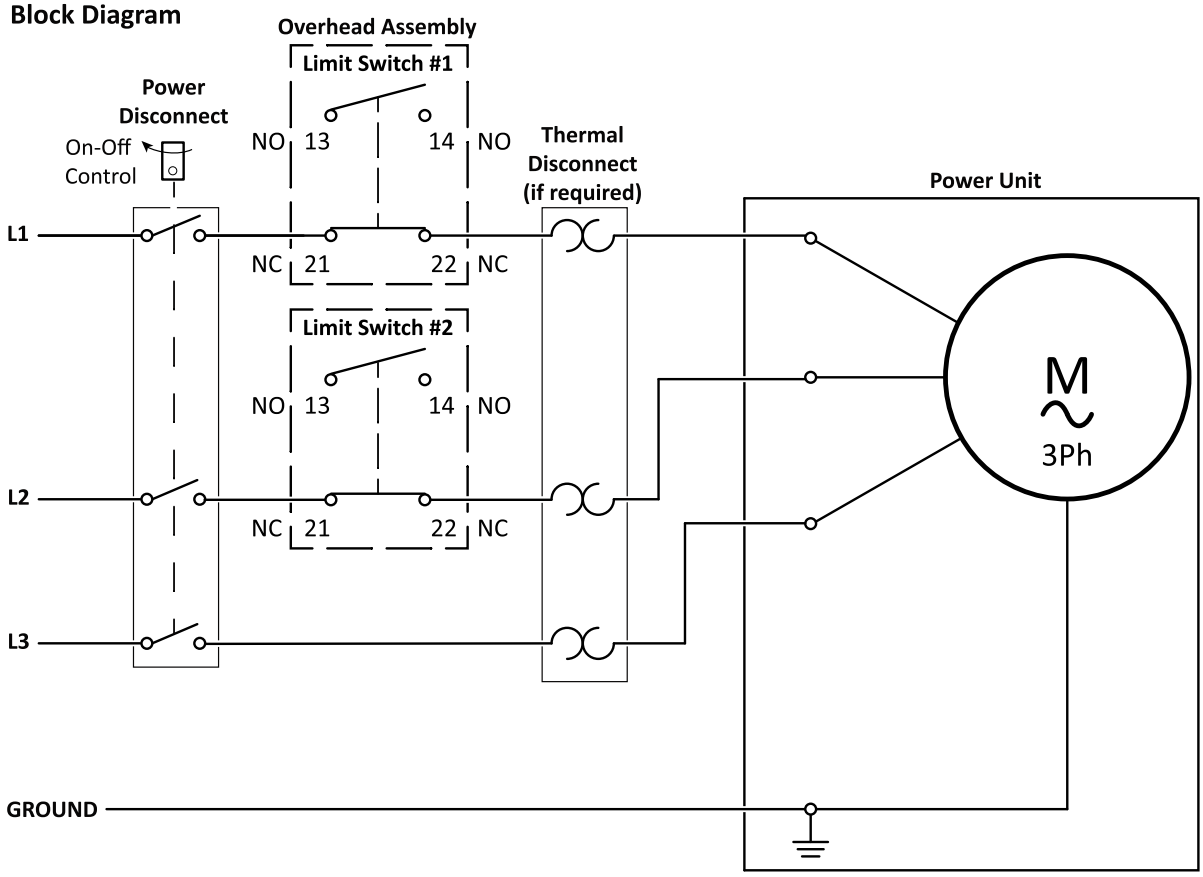

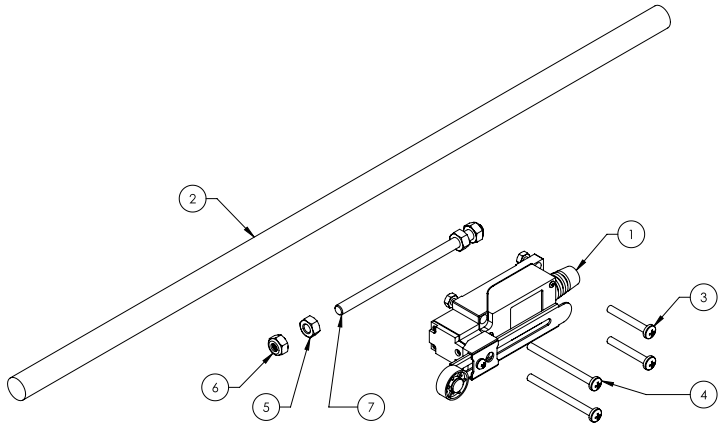

ITEM NO	PART NUMBER	DESCRIPTION	QTY	REV
1	5520088	ROCKER LIMIT SWITCH, 25A	1	--
2	5520116	CABLE, AWG 14-4, SOOW	5000mm	--
3	5530494	PHPS M4 x 0.7 x 30 FT	2	--
4	5530492	PHPS M4 x 0.7 x 50 FT	2	--
5	5535112	NUT M6 x 1.0	2	--
6	5535357	NUT M6 x 1.0 NL, CL10.9	2	--
7	5530073	THREADED ROD M6 x 1.0 x 110 FT, CL 4.8	1	--

DO NOT SCALE DRAWING

	NAME	DATE
DRAWN	TM	03/27/2024
CHECKED		

BP BendPak
30440 AGOURA RD.
AGOURA HILLS, CA 91301

DIMENSIONS ARE IN MM

THIRD ANGLE PROJECTION

TITLE: AP CLEARFLOOR 3ph MICROSWITCH KIT

SIZE A | DWG. NO. 5216263 | REV A

SCALE: 1:2 | SHEET 1 OF 1

PROPRIETARY AND CONFIDENTIAL
THE INFORMATION CONTAINED IN THIS DRAWING IS THE SOLE PROPERTY OF BENDPAK INC. ANY REPRODUCTION IN PART OR AS A WHOLE WITHOUT THE WRITTEN PERMISSION OF BENDPAK INC. IS PROHIBITED.

WHERE USED
3 PHASE LIFTS

NOTE: UNLESS OTHERWISE SPECIFIED .
1. REFER TO MODEL FOR ADDITIONAL INFORMATION
2. SEE SHIPPING INSTRUCTIONS FOR FINAL PACKAGING

5585247
208-240VAC, FLA 12.6A, 3-Phase, 50/60 Hz., 3 HP

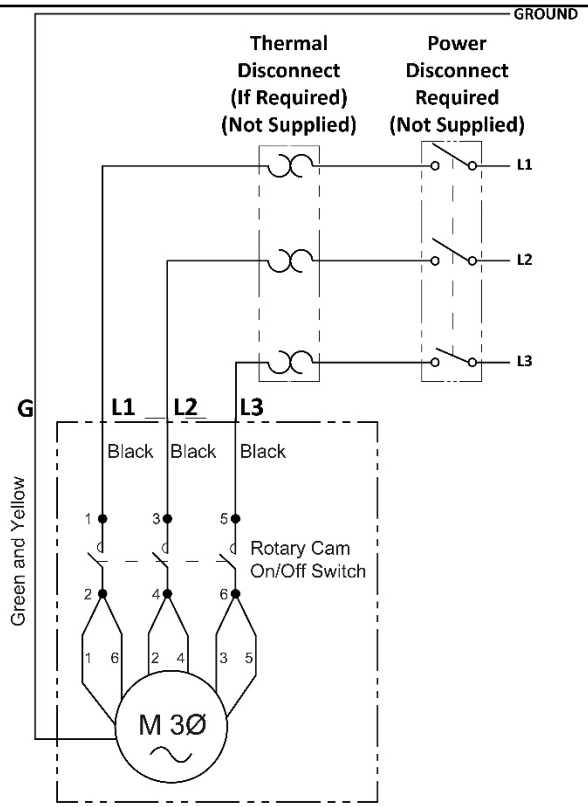

5585247
380-460VAC, FLA 6.4A, 3-Phase, 50/60 Hz., 3 HP

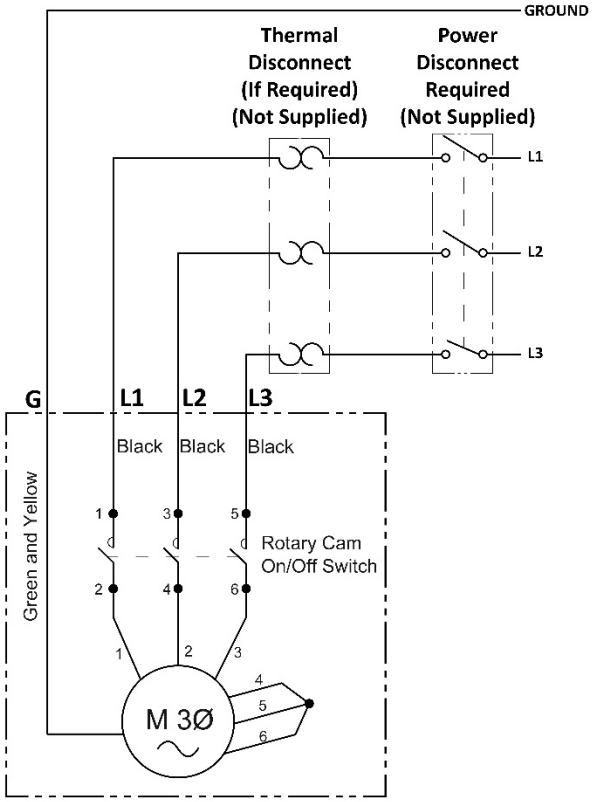

Labels

A

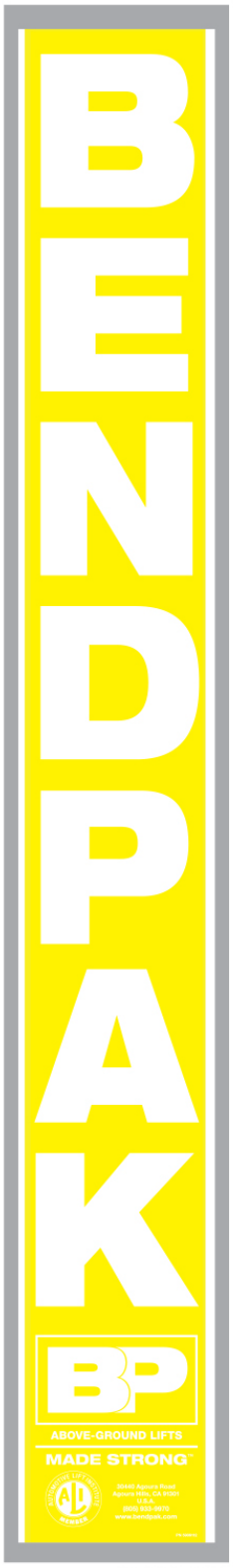

PN 5906112

B

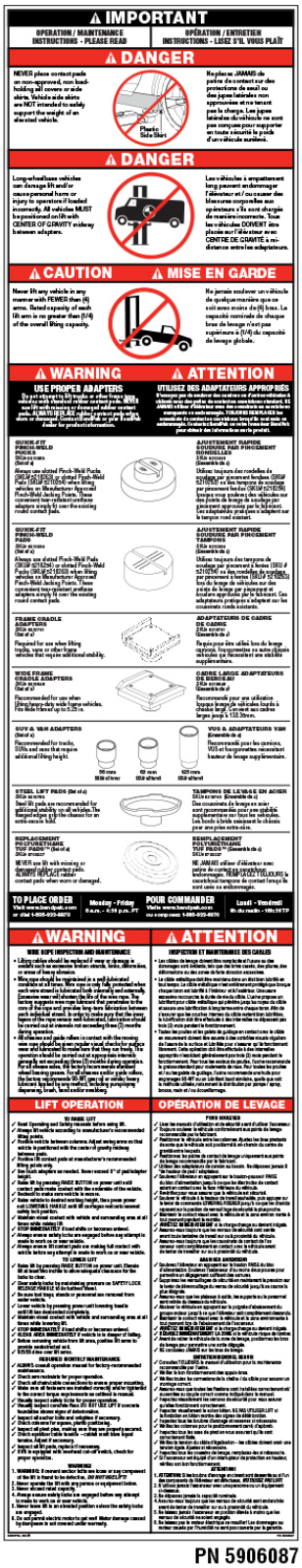

PN 5906087

C

PN 5905940

D

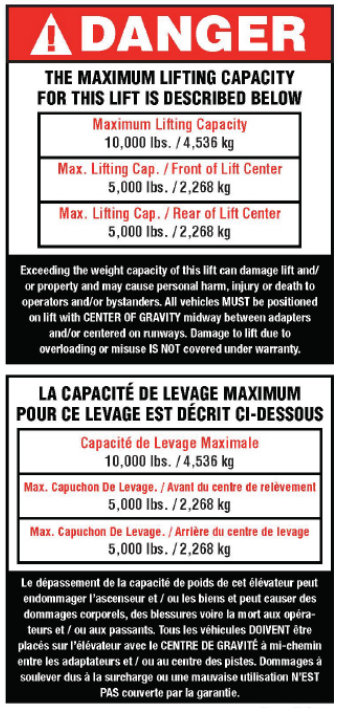

PN 5905403

E

PN 5905655

F *On following page*

G

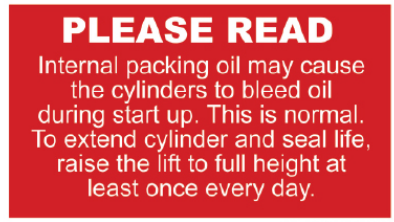

PN 5905177

F

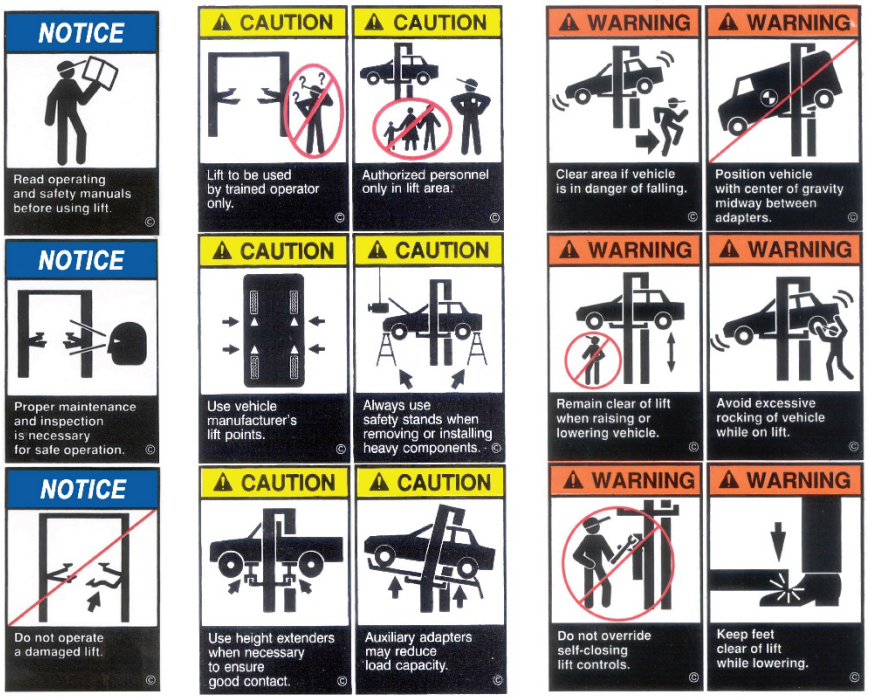

PN 5905109
(Kit includes Blue, Yellow & Orange Labels)
(Order Labels from ALI)

H

NOTICE

If attachments, accessories, or configuration modifying components used on this lift are located in the load path and affect operation of the lift, affect the lift electrical listing, or affect intended vehicle accommodation; and if they are not certified for use on this lift, then the certification of this lift shall become null and void. Contact the participant for information pertaining to certified attachments, accessories, or configuration modifying components.

www.autolift.org ©2011 by ALI, Inc. ALI / WLSIA01

PN 5905377

J

TO RAISE LIFT:	TO LOWER LIFT:
1. Press and hold **UP** button. 2. When lift is just **PAST** desired height, release **UP** button. 3. Hold down Lowering Handle. **DO NOT** hold down Safety Lock Release Handle. Lift engages on safety locks. 4. Release Lowering Handle.	1. Press and hold **UP** button for two to three seconds, moving lift off safety locks. 2. Hold down Safety Lock Release Handle **and** Lowering Handle. 3. When lift is fully lowered, release both handles. PN 5905414

PN 5905414

I

Nameplate

PN 5906156

K

CALIFORNIA PROPOSITION 65
⚠ WARNING ⚠

WARNING! This product can expose you to chemicals including styrene and vinyl chloride which are on the list of over 900 chemicals identified by the State of California to cause cancer, birth defects or reproductive harm. ALWAYS use this product in accordance with the manufacturer's instructions.

For more information, go to www.p65warnings.ca.gov. PN 5905775

PN 5905775

L

BENDPAK INC. EST. 1965 60 YEARS OF EXCELLENCE

PN 5906163

M

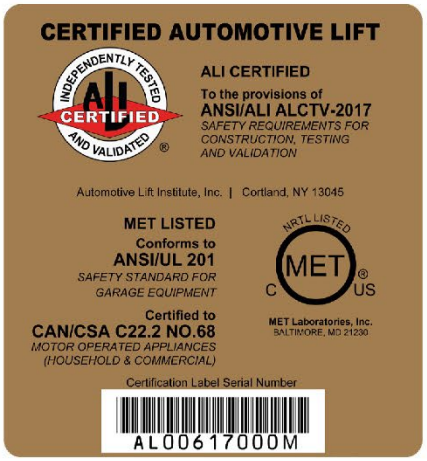
CERTIFIED AUTOMOTIVE LIFT
INDEPENDENTLY TESTED AND VALIDATED
ALI CERTIFIED
ALI CERTIFIED
To the provisions of
ANSI/ALI ALCTV-2017
SAFETY REQUIREMENTS FOR CONSTRUCTION, TESTING AND VALIDATION
Automotive Lift Institute, Inc. | Cortland, NY 13045
MET LISTED
Conforms to
ANSI/UL 201
SAFETY STANDARD FOR GARAGE EQUIPMENT
Certified to
CAN/CSA C22.2 NO.68
MOTOR OPERATED APPLIANCES (HOUSEHOLD & COMMERCIAL)
NRTL LISTED
MET
C US
MET Laboratories, Inc.
BALTIMORE, MD 21230
Certification Label Serial Number
AL00617000M

PN 5905654

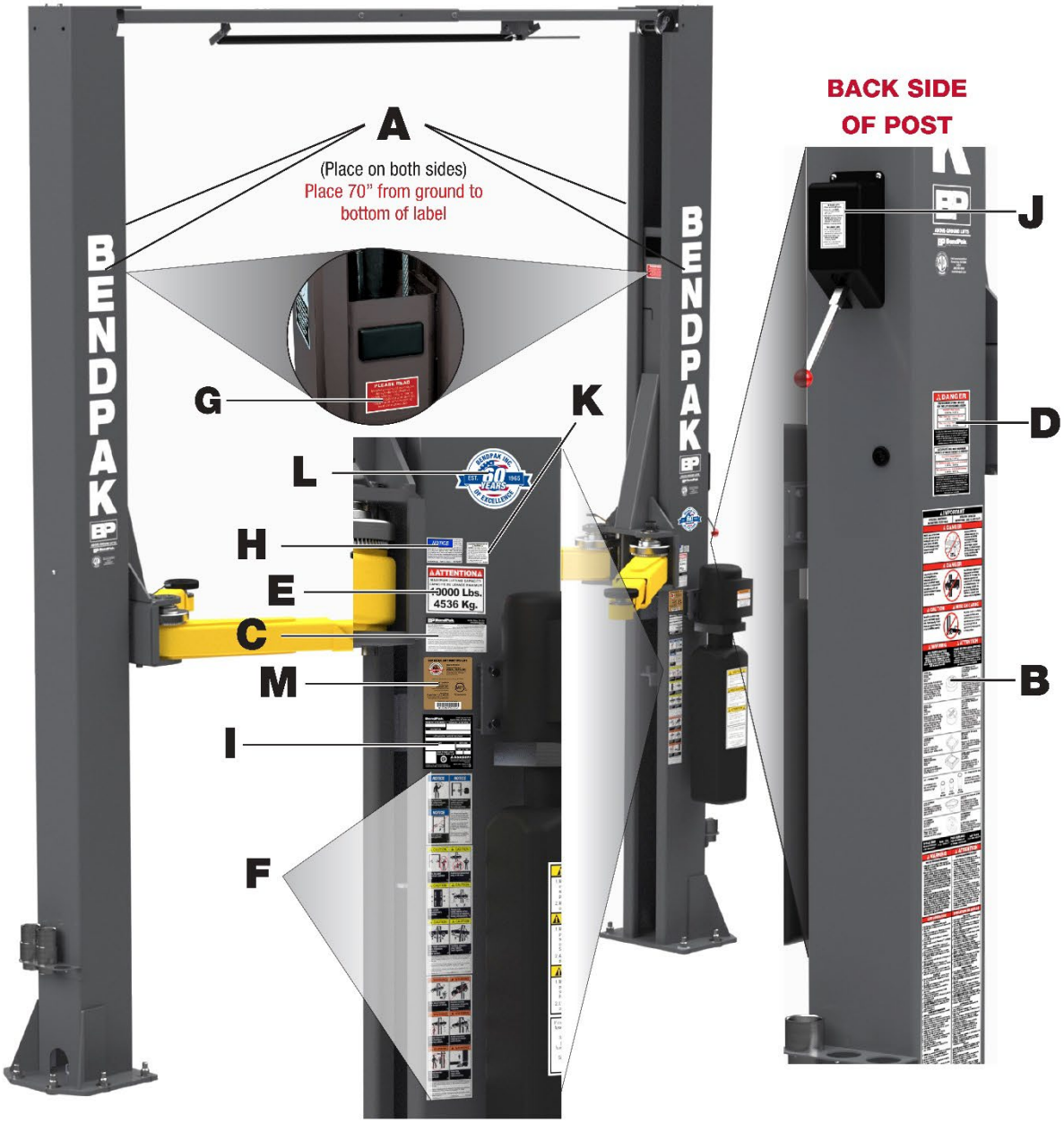
A
(Place on both sides)
Place 70" from ground to bottom of label
BENDPAK
G
K
L
H
E
C
M
I
F
BACK SIDE OF POST
J
D
B

Parts Drawings

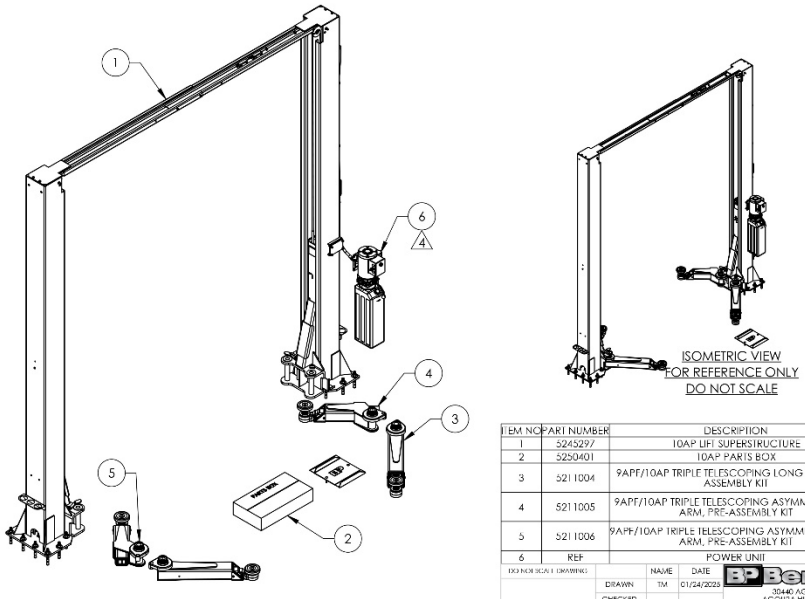

ITEM NO	PART NUMBER	DESCRIPTION	QTY
1	5245297	10AP LIFT SUPERSTRUCTURE	1
2	5250401	10AP PARTS BOX	1
3	5211004	9APF/10AP TRIPLE TELESCOPING LONG ARM, PRE-ASSEMBLY KIT	2
4	5211005	9APF/10AP TRIPLE TELESCOPING ASYMMETRIC LEFT ARM, PRE-ASSEMBLY KIT	1
5	5211006	9APF/10AP TRIPLE TELESCOPING ASYMMETRIC RIGHT ARM, PRE-ASSEMBLY KIT	1
6	REF	POWER UNIT	1

DO NOT SCALE DRAWING

	NAME	DATE
DRAWN	TM	01/24/2025
CHECKED		

BP BendPak
30440 AGOURA RD.
AGOURA HILLS, CA 91301

DIMENSIONS ARE IN MM

THIRD ANGLE PROJECTION

TITLE: 10AP PRODUCTION LIFT VER D

SIZE A | DWG. NO. 5260726 | REV

SCALE: 1:30 | SHEET 1 OF 3

PROPRIETARY AND CONFIDENTIAL
THE INFORMATION CONTAINED IN THIS DRAWING IS THE SOLE PROPERTY OF BENDPAK INC. ANY REPRODUCTION IN PART OR AS A WHOLE WITHOUT THE WRITTEN PERMISSION OF BENDPAK INC IS PROHIBITED.

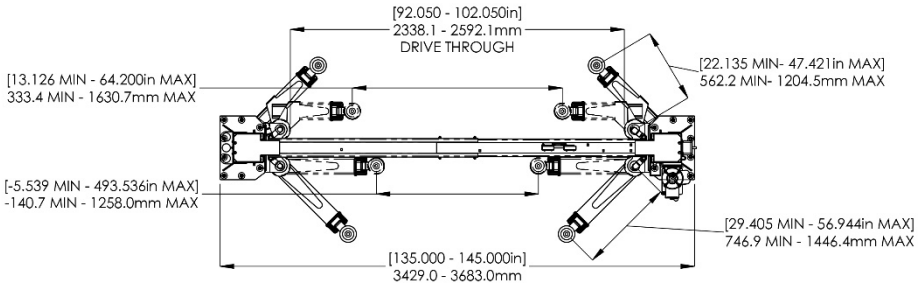

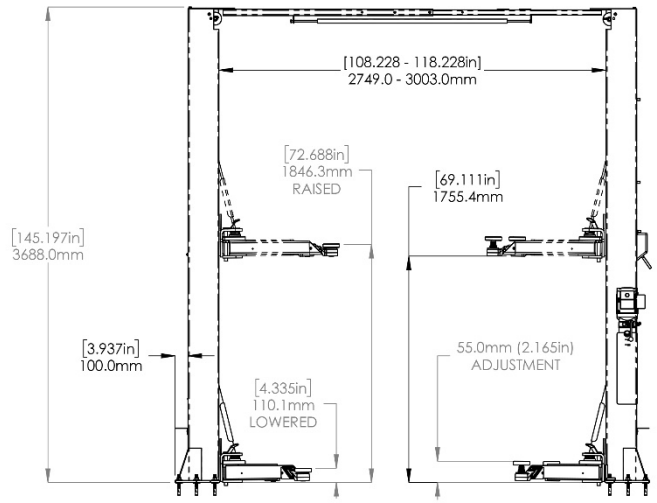

BP BendPak
30440 AGOURA RD.
AGOURA HILLS, CA 91301

TITLE: 10AP PRODUCTION LIFT VER D

SIZE A | DWG. NO. 5260726 | REV

SCALE: 1:32 | SHEET 2 OF 3

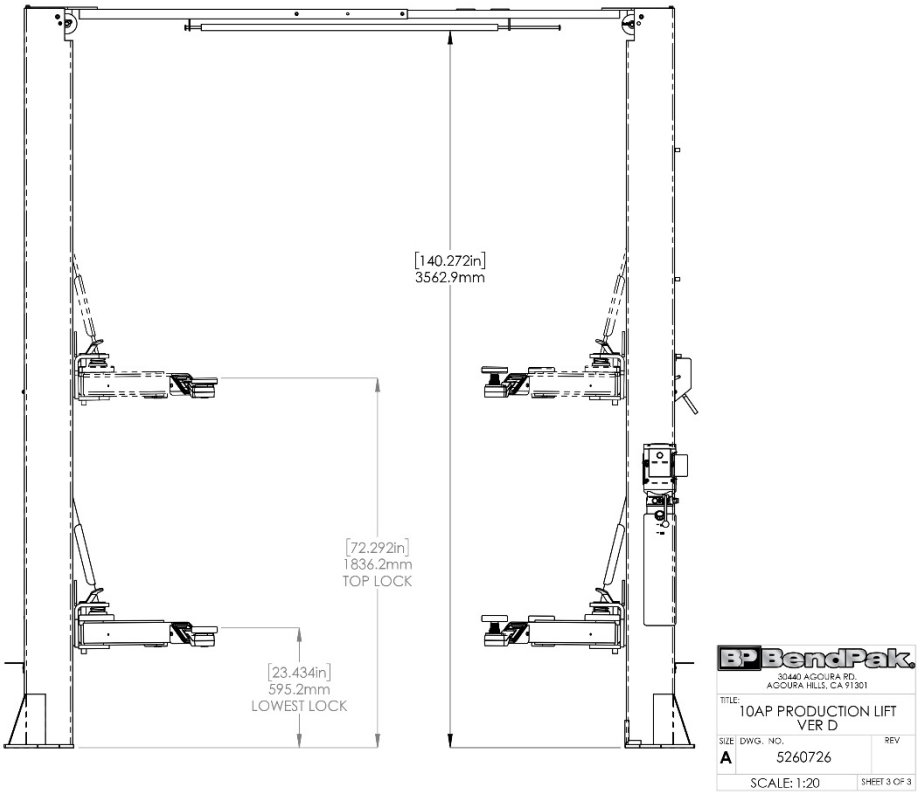

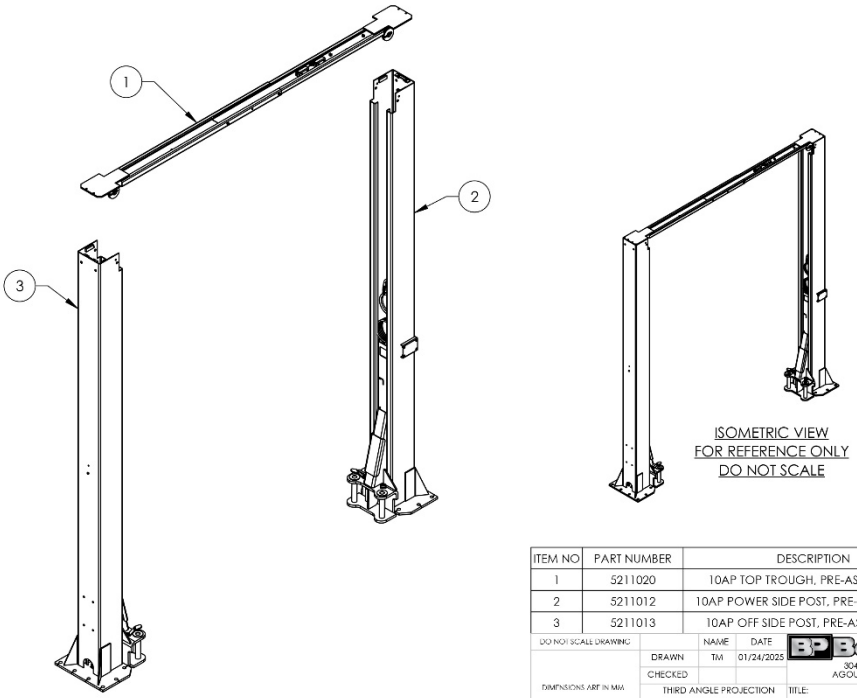

ITEM NO	PART NUMBER	DESCRIPTION	QTY
1	5211020	10AP TOP TROUGH, PRE-ASSEMBLY KIT	1
2	5211012	10AP POWER SIDE POST, PRE-ASSEMBLY KIT	1
3	5211013	10AP OFF SIDE POST, PRE-ASSEMBLY KIT	1

DO NOT SCALE DRAWING

	NAME	DATE
DRAWN	TM	01/24/2025
CHECKED		

DIMENSIONS ART IN MM

THIRD ANGLE PROJECTION

PROPRIETARY AND CONFIDENTIAL
THE INFORMATION CONTAINED IN THE DRAWING IS THE SOLE PROPERTY OF BENDPAK INC. ANY REPRODUCTION IN PART OR AS A WHOLE WITHOUT THE WRITTEN PERMISSION OF BENDPAK INC. IS PROHIBITED.

BP BendPak.
30440 AGOURA RD.
AGOURA HILLS, CA 91301
TITLE:
10AP LIFT
SUPERSTRUCTURE
SIZE
A
DWG. NO.
5245297
REV
SCALE: 1:30
SHEET 1 OF 1

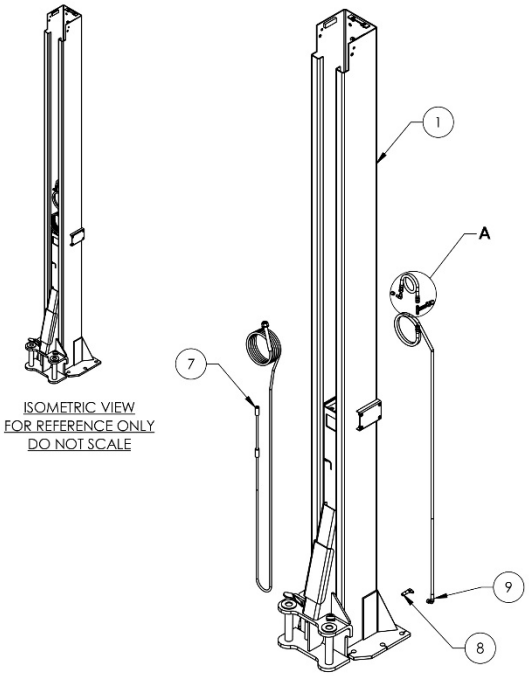

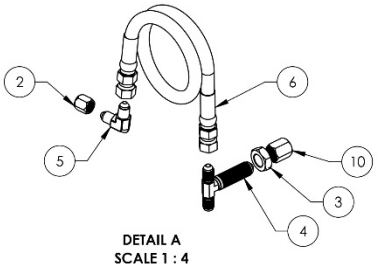

ITEM NO	PART NUMBER	DESCRIPTION	QTY
1	5216340	10AP POWER SIDE POST ASSEMBLY	1
2	5550054	THREADED FITTING CAP, -04 JIC FEMALE	1
3	5535022	NUT 9/16"-18 JN, Gr 5	1
4	5550003	FTG TEE -04JIC x -04JIC x -06JIC	1
5	5550223	FTG ELB -04 JIC x -04 JIC	1
6	5570314	HYDRAULIC HOSE ASSEMBLY Ø6.35 x 285mm DS	1
7	5595752	CABLE ASSEMBLY Ø10 x 10170mm DBST	1
8	5550113	FTG ELB -04 NPT L x -04 JIC	1
9	5570279	HYDRAULIC HOSE ASSEMBLY Ø6.35 x 3276mm SB	1
10	5550177	THREADED FITTING CAP, -06 JIC FEMALE	1

DO NOT SCALE DRAWING

DIMENSIONS ARE IN MM

	NAME	DATE
DRAWN	TM	05/28/2025
CHECKED		

THIRD ANGLE PROJECTION

PROPRIETARY AND CONFIDENTIAL
THE INFORMATION CONTAINED IN THIS DRAWING IS THE SOLE PROPERTY OF BENDPAK INC. ANY REPRODUCTION IN PART OR AS A WHOLE WITHOUT THE WRITTEN PERMISSION OF BENDPAK INC. IS PROHIBITED.

BP BendPak.
30440 AGOURA RD.
AGOURA HILLS, CA 91301

TITLE: 10AP POWER SIDE POST, PRE-ASSEMBLY KIT

SIZE	DWG. NO.	REV
A	5211012	

SCALE: 1:20 SHEET 1 OF 2

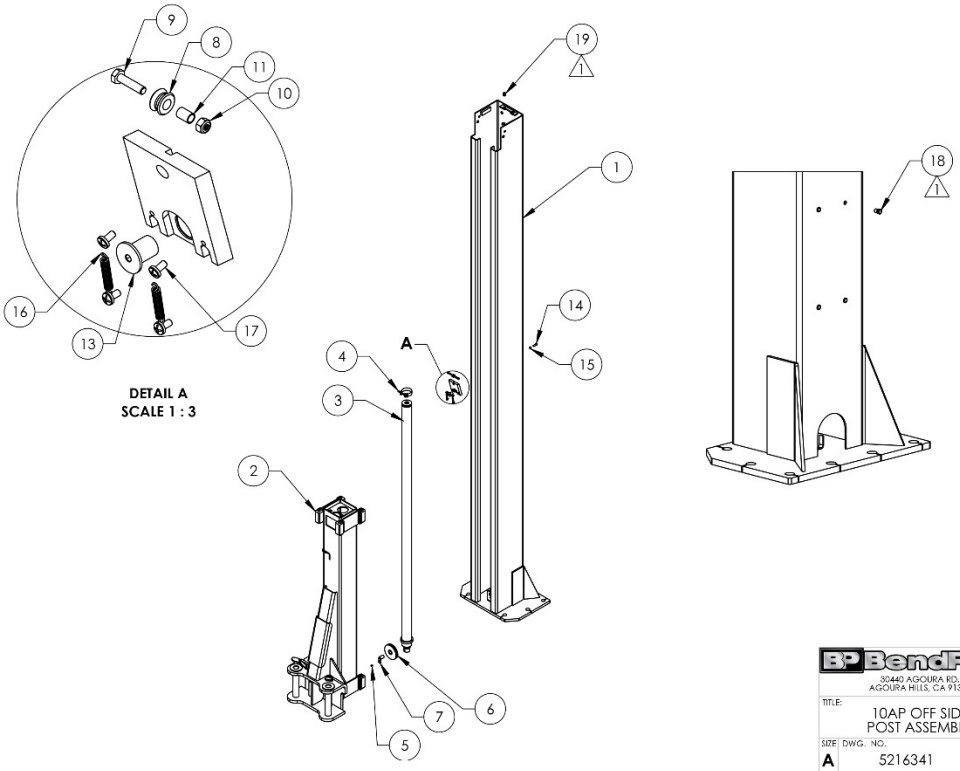

BP BendPak.
30440 AGOURA RD.
AGOURA HILLS, CA 91301

TITLE: 10AP OFF SIDE POST ASSEMBLY

SIZE	DWG. NO.	REV
A	5216341	

SCALE: 1:25 SHEET 2 OF 2

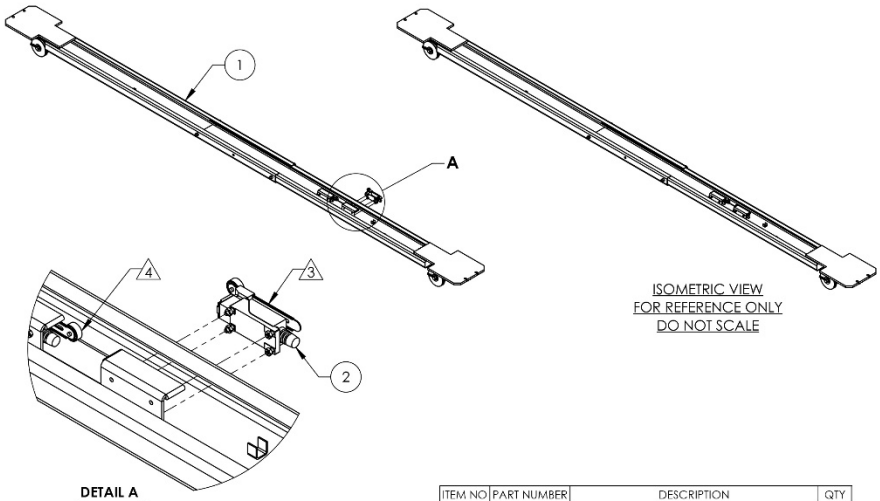

ITEM NO	PART NUMBER	DESCRIPTION	QTY
1	5216345	10AP TOP TROUGH ASSEMBLY	1
2	5520088	ROCKER LIMIT SWITCH, 25A	1*

DO NOT SCALE DRAWING

	NAME	DATE
DRAWN	TM	05/28/2025
CHECKED		

BP BendPak.
30440 AGOURA RD.
AGOURA HILLS, CA 91301

DIMENSIONS ARE IN MM

THIRD ANGLE PROJECTION

TITLE: 10AP TOP TROUGH, PRE-ASSEMBLY KIT

SIZE A | DWG. NO. 5211020 | REV

PROPRIETARY AND CONFIDENTIAL
THE INFORMATION CONTAINED IN THIS DRAWING IS THE SOLE PROPERTY OF BENDPAK INC. ANY REPRODUCTION IN PART OR AS A WHOLE WITHOUT THE WRITTEN PERMISSION OF BENDPAK INC. IS PROHIBITED.

SCALE: 1:20 | SHEET 1 OF 1

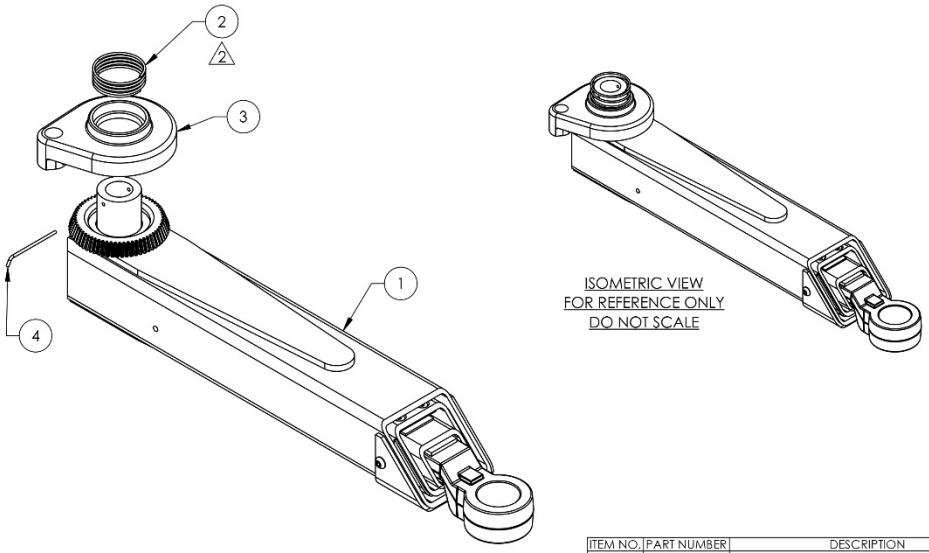

ITEM NO.	PART NUMBER	DESCRIPTION	QTY.
1	5216216	9APF/10AP TRIPLE TELESCOPING ARM ASSEMBLY, LONG	1
2	5540044	COMPRESSION SPRING Ø74 x 40mm	1
3	5701954	10/12AP ARM INTERNAL FULL CIRCLE GEAR STOP, THREADED HOLES	1
4	5505086	BENT CLEVIS PIN, Ø4.0 x 86mm	1

DO NOT SCALE DRAWING

	NAME	DATE
DRAWN	TM	04/14/2025
CHECKED		

BP BendPak.
30440 AGOURA RD.
AGOURA HILLS, CA 91301

DIMENSIONS ARE IN MM

THIRD ANGLE PROJECTION

TITLE: 9APF/10AP TRIPLE TELESCOPING LONG ARM, PRE-ASSEMBLY KIT

SIZE A | DWG. NO. 5211004 | REV

PROPRIETARY AND CONFIDENTIAL
THE INFORMATION CONTAINED IN THIS DRAWING IS THE SOLE PROPERTY OF BENDPAK INC. ANY REPRODUCTION IN PART OR AS A WHOLE WITHOUT THE WRITTEN PERMISSION OF BENDPAK INC. IS PROHIBITED.

SCALE: 1:6 | SHEET 1 OF 2

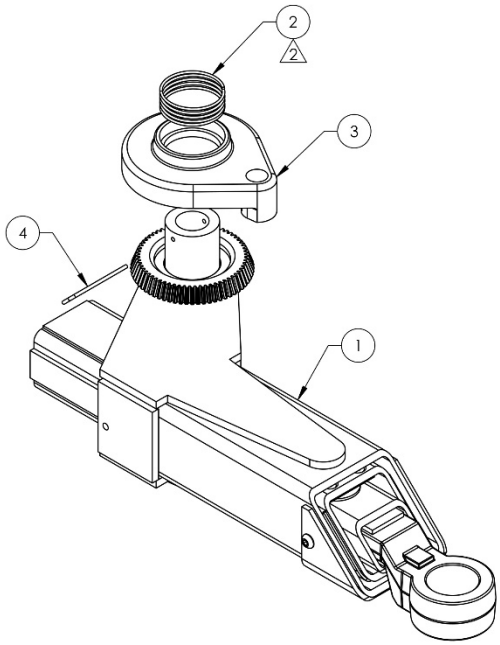

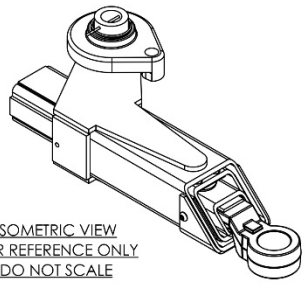

ISOMETRIC VIEW
FOR REFERENCE ONLY
DO NOT SCALE

ITEM NO.	PART NUMBER	DESCRIPTION	QTY.
1	5216217	9APF/10AP TRIPLE TELESCOPING ASYMMETRIC ARM ASSEMBLY, LEFT	1
2	5540044	COMPRESSION SPRING Ø74 x 40mm	1
3	5701954	10/12AP ARM INTERNAL FULL CIRCLE GEAR STOP, THREADED HOLES	1
4	5505086	BENT CLEVIS PIN, Ø4.0 x 86mm	1

DO NOT SCALE DRAWING

DIMENSIONS ARE IN MM.

	NAME	DATE
DRAWN	TM	04/14/2025
CHECKED		

THIRD ANGLE PROJECTION

BP BendPak.
30440 AGOURA RD.
AGOURA HILLS, CA 91301

TITLE: 9APF/10AP TRIPLE TELESCOPING ASYMMETRIC LEFT ARM, PRE-ASSEMBLY KIT

SIZE A | DWG. NO. 5211005 | REV

SCALE: 1:5 | SHEET 1 OF 2

PROPRIETARY AND CONFIDENTIAL
THE INFORMATION CONTAINED IN THIS DRAWING IS THE SOLE PROPERTY OF BENDPAK INC. ANY REPRODUCTION IN PART OR AS A WHOLE WITHOUT THE WRITTEN PERMISSION OF BENDPAK INC. IS PROHIBITED.

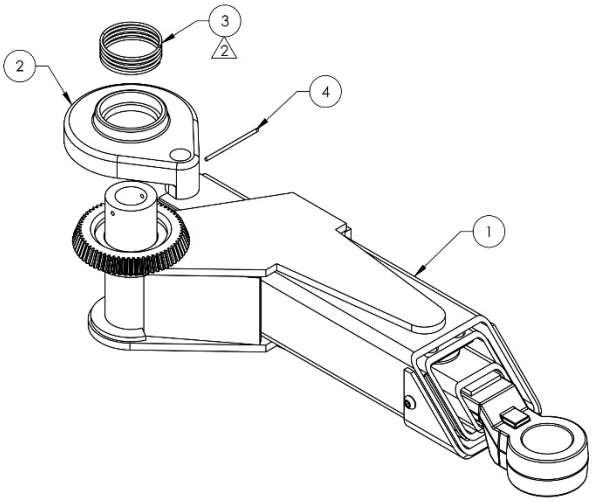

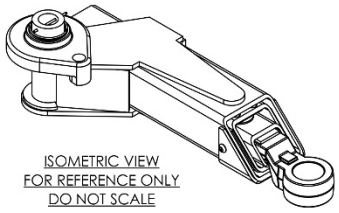

ISOMETRIC VIEW
FOR REFERENCE ONLY
DO NOT SCALE

ITEM NO.	PART NUMBER	DESCRIPTION	QTY.
1	5216218	9APF/10AP TRIPLE TELESCOPING ASYMMETRIC ARM ASSEMBLY, RIGHT	1
2	5701954	10/12AP ARM INTERNAL FULL CIRCLE GEAR STOP, THREADED HOLES	1
3	5540044	COMPRESSION SPRING Ø74 x 40mm	1
4	5505086	BENT CLEVIS PIN, Ø4.0 x 86mm	1

DO NOT SCALE DRAWING

DIMENSIONS ARE IN MM.

	NAME	DATE
DRAWN	TM	04/14/2025
CHECKED		

THIRD ANGLE PROJECTION

BP BendPak.
30440 AGOURA RD.
AGOURA HILLS, CA 91301

TITLE: 9APF/10AP TRIPLE TELESCOPING ASYMMETRIC RIGHT ARM, PRE-ASSEMBLY KIT

SIZE A | DWG. NO. 5211006 | REV

SCALE: 1:5 | SHEET 1 OF 2

PROPRIETARY AND CONFIDENTIAL
THE INFORMATION CONTAINED IN THIS DRAWING IS THE SOLE PROPERTY OF BENDPAK INC. ANY REPRODUCTION IN PART OR AS A WHOLE WITHOUT THE WRITTEN PERMISSION OF BENDPAK INC. IS PROHIBITED.

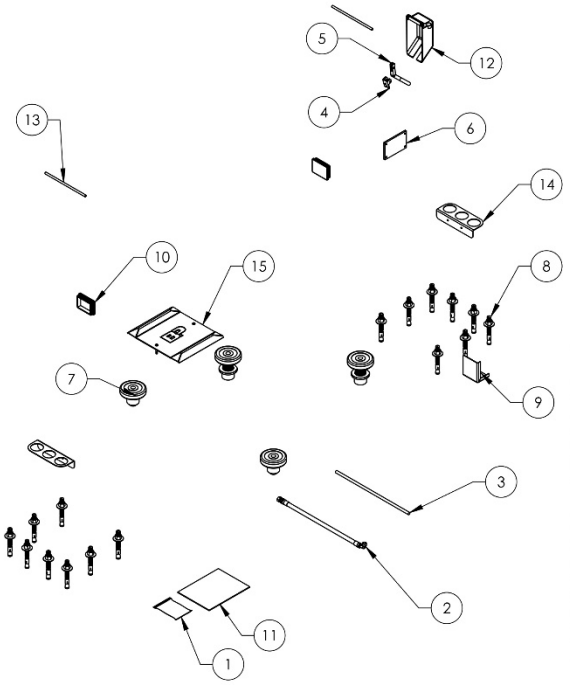

ITEM NO	PART NUMBER	DESCRIPTION	QTY
1	5174155	10AP PARTS BAG	1
2	5570277	HYDRAULIC HOSE ASSEMBLY Ø10 x 2217mm SB	1
3	5520032	CABLE, AWG 14-2, SOOW	4046mm
4	5700404	AP SAFETY PIVOT HOLDER	1
5	5761017	AP SAFETY HANDLE	1
6	5715003	POWER UNIT VIBRATION DAMPENER	1
7	5216239	ROUND ADJUSTABLE LIFT PAD ADAPTER ASSEMBLY, Ø60mm	4
8	5530337	AB 3/4" x 6.3"	16
9	5701698	10AP FOOT GUARD	1
10	5715196	POLYETHYLENE COVER BLOCK 105 x 80	2
11	5900265	10AP INSTALLATION MANUAL	1
12	5716072	AP POWER SIDE PLASTIC SAFETY COVER	1
13	5746167	DOUBLE THREADED ROD M10 x 1.5 x 275	2
14	5701660	HEIGHT ADAPTER HOLDER, 60mm	2
15	5215875	WHEEL SPOTTING DISH KIT	1

DO NOT SCALE DRAWING

	NAME	DATE
DRAWN	TM	02/20/2025
CHECKED		

DIMENSIONS ARE IN MM

THIRD ANGLE PROJECTION

BP BendPak.
30440 AGOURA RD.
AGOURA HILLS, CA 91301

TITLE: 10AP PARTS BOX

SIZE A | DWG. NO. 5250401 | REV

SCALE: 1:20 | SHEET 1 OF 1

PROPRIETARY AND CONFIDENTIAL
THE INFORMATION CONTAINED IN THIS DRAWING IS THE SOLE PROPERTY OF BENDPAK INC. ANY REPRODUCTION IN PART OR AS A WHOLE WITHOUT THE WRITTEN PERMISSION OF BENDPAK INC. IS PROHIBITED.

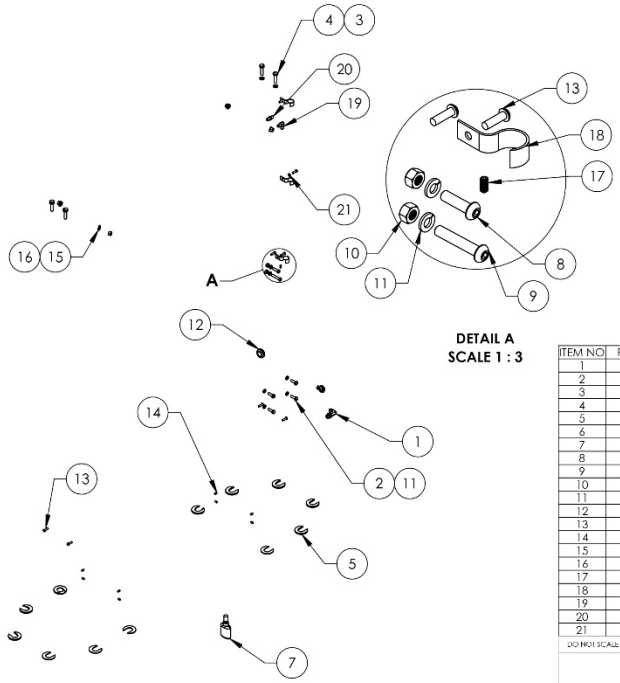

ITEM NO	PART NUMBER	DESCRIPTION	QTY
1	5550183	FTG ELB -06 JIC -06L ORB	1
2	5530010	HHB M8 x 1.25 x 25 FT, CL 10.9	4
3	5545200	WASHER M10 x Ø18 SL, CL10.9	4
4	5530302	HHB M10 x 1.5 x 40 FT, CL 10.9	4
5	5545535	C WASHER SHIM FOR LIFTS	20
6	5520140	ROMEX CONNECTOR 3/8 #6623	1
7	5580012	LIQUID PTFE THREAD SEALANT 50ml	1
8	5530412	BHSK M8 x 1.25 x 30 CL10.9	1
9	5530413	BHSK M8 x 1.25 x 45 CL10.9	1
10	5535001	NUT M8 x 1.25 NL, CL10.9	2
11	5545202	WASHER M8 x Ø15 SL, CL10.9	6
12	5520001	RUBBER GROMMET, 3/4 I.D.	1
13	5530065	BHSK M6 x 1.0 x 20 FT, CL 10.9	8
14	5530423	SSS M6 x 1.0 x 12 CONE, CL 10.9	8
15	5545341	WASHER M10 x Ø20 FLAT, CL10.9	4
16	5535013	NUT M10 x 1.5 NL, CL10.9	4
17	5530460	SSS M6 x 1.0 x 12 NL FLAT	1
18	5550492	3/4" PIPE STRAP	3
19	5550223	FTG ELB -04 JIC x -04 JIC	1
20	5550095	FTG NPL -04 JIC x -04 JIC	1
21	5545005	WASHER M6 x 12 FLAT, CL 10.9	2

DO NOT SCALE DRAWING

	NAME	DATE
DRAWN	TM	02/20/2025
CHECKED		

DIMENSIONS ARE IN MM

THIRD ANGLE PROJECTION

BP BendPak.
30440 AGOURA RD.
AGOURA HILLS, CA 91301

TITLE: 10AP PARTS BAG

SIZE A | DWG. NO. 5174155 | REV

SCALE: 1:16 | SHEET 1 OF 1

PROPRIETARY AND CONFIDENTIAL
THE INFORMATION CONTAINED IN THIS DRAWING IS THE SOLE PROPERTY OF BENDPAK INC. ANY REPRODUCTION IN PART OR AS A WHOLE WITHOUT THE WRITTEN PERMISSION OF BENDPAK INC. IS PROHIBITED.

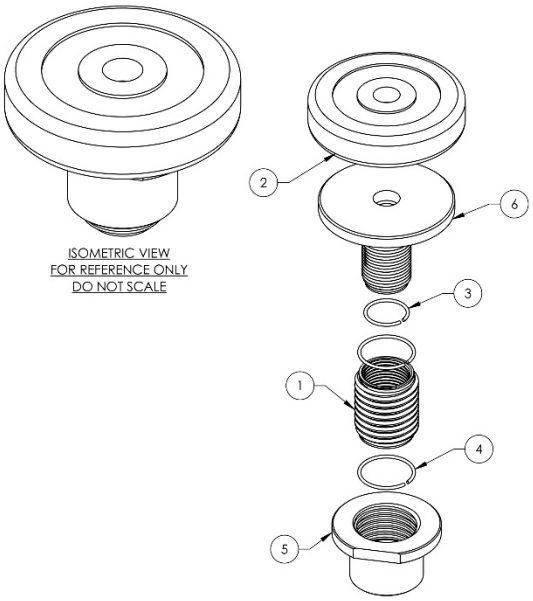

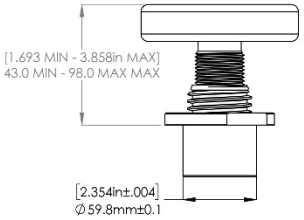

ITEM NO.	PART NUMBER	DESCRIPTION	QTY.
1	5746692	ADJUSTABLE LIFT PAD INNER SCREW, Ø60mm	1
2	5715052	ROUND LIFT PAD ADAPTER POLYURETHANE PAD	1
3	5540025	S RING Ø35mm	1
4	5540026	S RING Ø45mm	2
5	5746693	ADJUSTABLE LIFT PAD FEMALE SCREW ADAPTER, Ø60mm	1
6	5601986	ROUND LIFT PAD MALE SCREW ADAPTER WELDMENT, Ø60mm	1

DO NOT SCALE DRAWING

	NAME	DATE
DRAWN	CA	03/23/2023
CHECKED		

BendPak.
1645 LEMONWOOD DR.
SANTA PAULA, CA 93060

DIMENSIONS ARE IN MM

THIRD ANGLE PROJECTION

TITLE: ROUND ADJUSTABLE LIFT PAD ADAPTER ASSEMBLY, Ø60mm

SIZE A | DWG. NO. 5216239 | REV

SCALE: 1:3 | SHEET 1 OF 1

PROPRIETARY AND CONFIDENTIAL
THE INFORMATION CONTAINED IN THIS DRAWING IS THE SOLE PROPERTY OF BENDPAK INC. ANY REPRODUCTION IN PART OR AS A WHOLE WITHOUT THE WRITTEN PERMISSION OF BENDPAK INC. IS PROHIBITED.

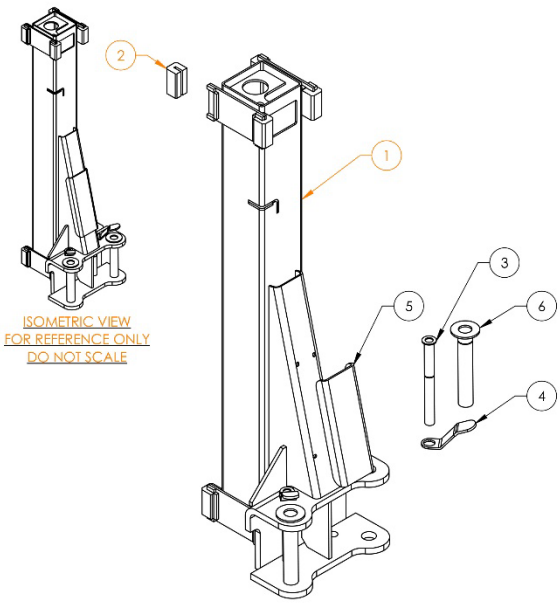

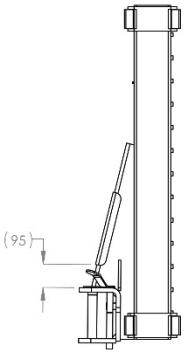

ITEM NO	PART NUMBER	DESCRIPTION	QTY
1	5601852	10AP LIFT HEAD WELDMENT	1
2	5716001	2 POST GUIDE BLOCK	8
3	5602029	9APF/10AP/SRT ARM LOCK GUIDE ROD WELDMENT, GROOVE	2
4	5701700	AP ARM LOCK RELEASE HANDLE	2
5	5930003	9APF/10AP/SRT LIFT HEAD GUSSET COVER	1
6	5601505	9APF/10AP/SRT ARM LOCK PIN WELDMENT, Ø38mm	2

DO NOT SCALE DRAWING

	NAME	DATE
DRAWN	CA	06/07/2022
CHECKED		

BendPak.
1645 LEMONWOOD DR.
SANTA PAULA, CA 93060

DIMENSIONS ARE IN MM

THIRD ANGLE PROJECTION

TITLE: 10AP LIFT HEAD ASSEMBLY

SIZE A | DWG. NO. 5216180 | REV

SCALE: 1:10 | SHEET 1 OF 2

PROPRIETARY AND CONFIDENTIAL
THE INFORMATION CONTAINED IN THIS DRAWING IS THE SOLE PROPERTY OF BENDPAK INC. ANY REPRODUCTION IN PART OR AS A WHOLE WITHOUT THE WRITTEN PERMISSION OF BENDPAK INC. IS PROHIBITED.

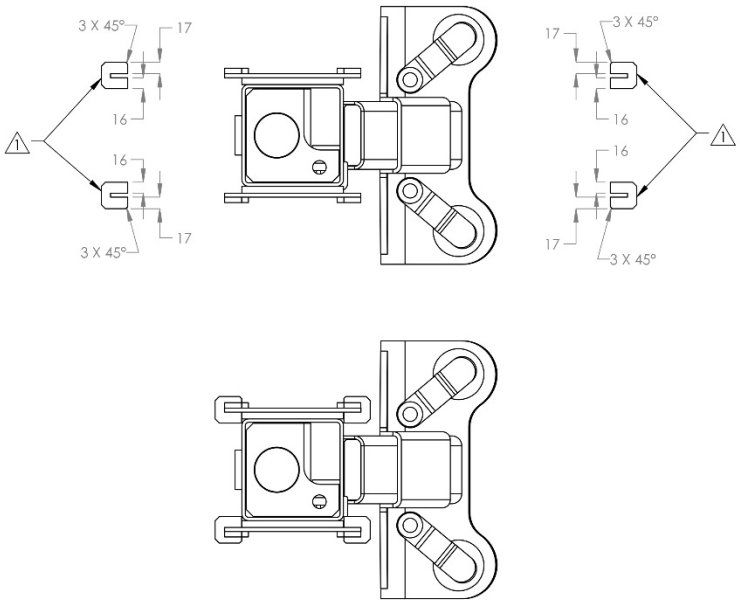

TOP VIEW

BendPak.
1645 LEMONWOOD DR.
SANTA PAULA, CA 93060

TITLE: 10AP LIFT HEAD ASSEMBLY

SIZE	DWG. NO.	REV
A	5216180	
SCALE: 1:10		SHEET 2 OF 2

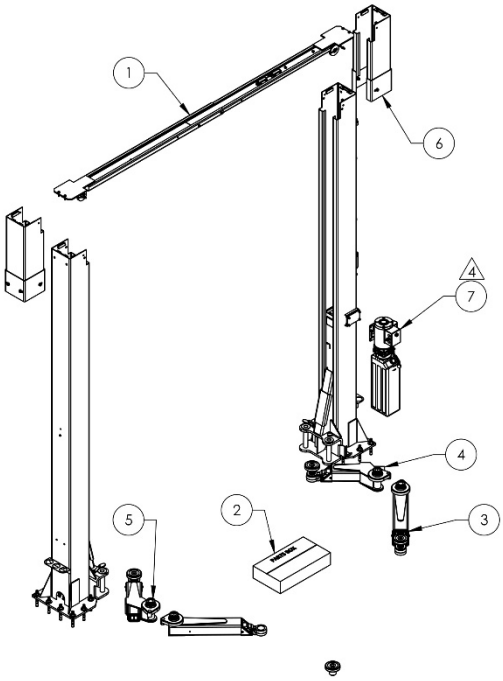

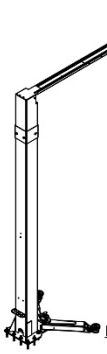

ISOMETRIC VIEW
FOR REFERENCE ONLY
DO NOT SCALE

ITEM NO	PART NUMBER	DESCRIPTION	QTY
1	5245427	10AP-168 LIFT SUPERSTRUCTURE	1
2	5250402	10AP-168 PARTS BOX	1
3	5211004	9APF/10AP TRIPLE TELESCOPING LONG ARM, PRE-ASSEMBLY KIT	2
4	5211005	9APF/10AP TRIPLE TELESCOPING ASYMMETRIC LEFT ARM, PRE-ASSEMBLY KIT	1
5	5211006	9APF/10AP TRIPLE TELESCOPING ASYMMETRIC RIGHT ARM, PRE-ASSEMBLY KIT	1
6	5216361	10AP POST EXTENSION ASSEMBLY	2
7	REF	POWER UNIT	1

DO NOT SCALE DRAWING

	NAME	DATE
DRAWN	TM	01/24/2025
CHECKED		

DIMENSIONS ARE IN MM

THIRD ANGLE PROJECTION

PROPRIETARY AND CONFIDENTIAL
THIS INFORMATION CONTAINED IN THIS DRAWING IS THE PROPERTY OF BENDPAK INC. ANY REPRODUCTION IN PART OR AS A WHOLE WITHOUT THE WRITTEN PERMISSION OF BENDPAK INC. IS PROHIBITED.

BendPak.
30440 AGOURA RD.
AGOURA HILLS, CA 91301

TITLE: 10AP-168 PRODUCTION LIFT VER D

SIZE	DWG. NO.	REV
A	5260727	
SCALE: 1:35		SHEET 1 OF 3

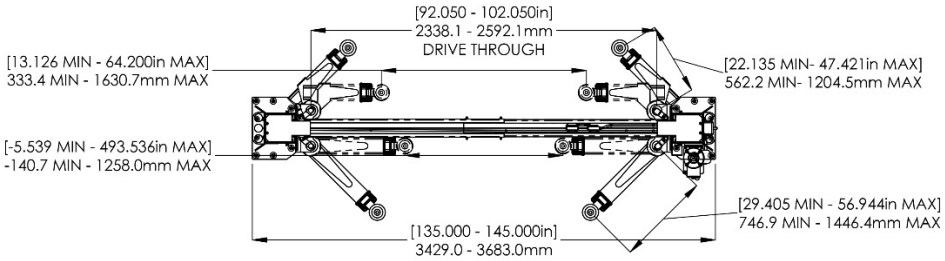

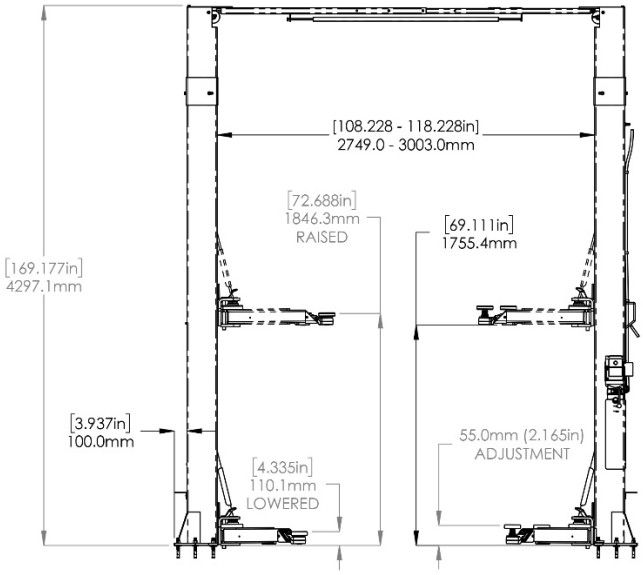

BP BendPak
30440 AGOURA RD.
AGOURA HILLS, CA 91301

TITLE: 10AP-168 PRODUCTION LIFT VER D		
SIZE A	DWG. NO. 5260727	REV
SCALE: 1:35		SHEET 2 OF 3

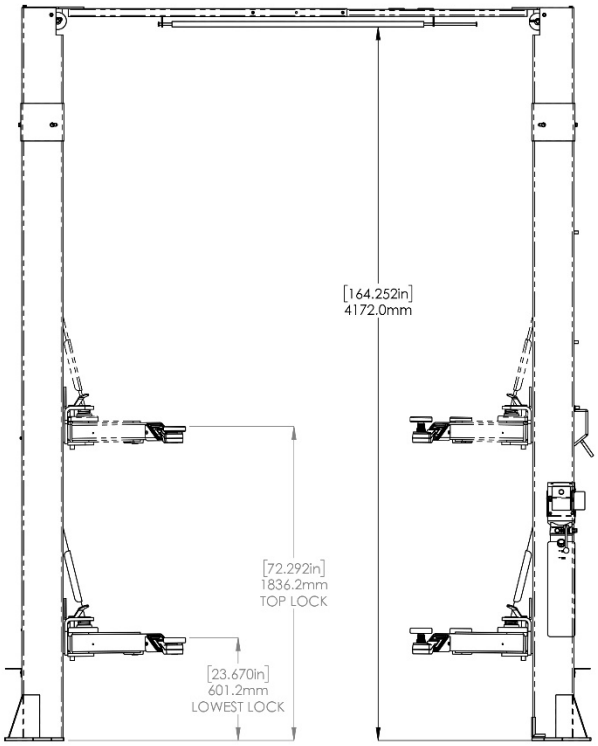

BP BendPak
30440 AGOURA RD.
AGOURA HILLS, CA 91301

TITLE: 10AP-168 PRODUCTION LIFT VER D		
SIZE A	DWG. NO. 5260727	REV
SCALE: 1:23		SHEET 3 OF 3

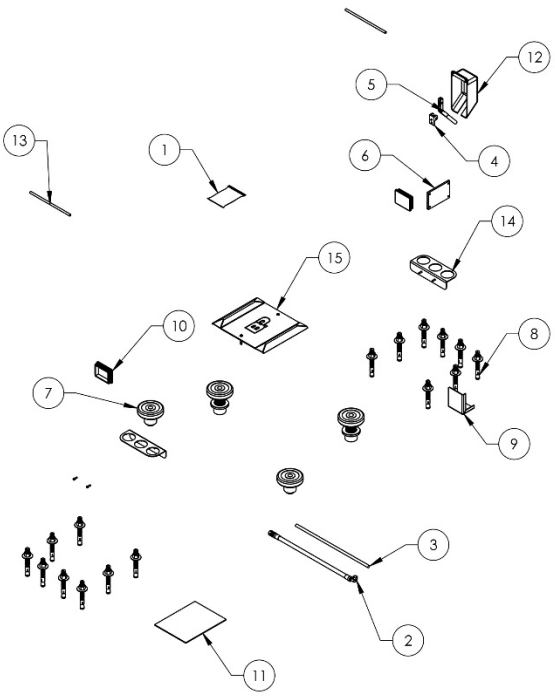

ITEM NO	PART NUMBER	DESCRIPTION	QTY
1	5174155	10AP PARTS BAG	1
2	5570277	HYDRAULIC HOSE ASSEMBLY Ø10 x 2217mm SB	1
3	5520032	CABLE, AWG 14-2, SOOW	4686mm
4	5700404	AP SAFETY PIVOT HOLDER	1
5	5761017	AP SAFETY HANDLE	1
6	5715003	POWER UNIT VIBRATION DAMPENER	1
7	5216239	ROUND ADJUSTABLE LIFT PAD ADAPTER ASSEMBLY, Ø60mm	4
8	5530337	AB 3/4" x 6.3"	16
9	5701698	10AP FOOT GUARD	1
10	5715196	POLYETHYLENE COVER BLOCK 105 x 80	2
11	5900265	10AP INSTALLATION MANUAL	1
12	5716072	AP POWER SIDE PLASTIC SAFETY COVER	1
13	5746167	DOUBLE THREADED ROD M10 x 1.5 x 275	2
14	5701660	HEIGHT ADAPTER HOLDER, 60mm	2
15	5215875	WHEEL SPOTTING DISH KIT	1

DO NOT SCALE DRAWING

	NAME	DATE
DRAWN	TM	02/21/2025
CHECKED		

BP BendPak.
30440 AGOURA RD.
AGOURA HILLS, CA 91301

DIMENSIONS ARE IN MM

THIRD ANGLE PROJECTION

TITLE: 10AP-168 PARTS BOX

SIZE A | DWG. NO. 5250402 | REV

SCALE: 1:20 | SHEET 1 OF 1

PROPRIETARY AND CONFIDENTIAL
THE INFORMATION CONTAINED IN THIS DRAWING IS THE SOLE PROPERTY OF BENDPAK INC. ANY REPRODUCTION IN PART OR AS A WHOLE WITHOUT THE WRITTEN PERMISSION OF BENDPAK INC. IS PROHIBITED.

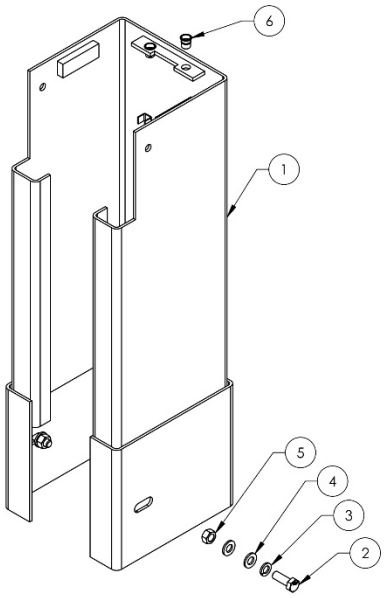

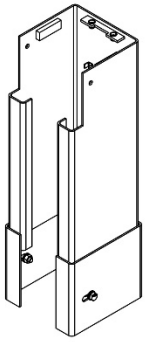

ISOMETRIC VIEW
FOR REFERENCE ONLY
DO NOT SCALE

ITEM NO	PART NUMBER	DESCRIPTION	QTY
1	5602147	10AP POST EXTENSION WELDMENT	1
2	5530076	HHB M12 x 1.75 x 35 FT, CL 10.9	4
3	5545201	WASHER M12 x 21 SL, CL 10.9	4
4	5545347	WASHER M12 x 24 FLAT, CL 10.9	8
5	5535354	NUT M12 x 1.75, CL 10.9	4
6	5535059	NUT M10 x 1.5 x 20.5, RIVET	2

DO NOT SCALE DRAWING

	NAME	DATE
DRAWN	TM	03/05/2025
CHECKED		

BP BendPak.
30440 AGOURA RD.
AGOURA HILLS, CA 91301

DIMENSIONS ARE IN MM

THIRD ANGLE PROJECTION

TITLE: 10AP POST EXTENSION ASSEMBLY

SIZE A | DWG. NO. 5216361 | REV

SCALE: 1:6 | SHEET 1 OF 1

PROPRIETARY AND CONFIDENTIAL
THE INFORMATION CONTAINED IN THIS DRAWING IS THE SOLE PROPERTY OF BENDPAK INC. ANY REPRODUCTION IN PART OR AS A WHOLE WITHOUT THE WRITTEN PERMISSION OF BENDPAK INC. IS PROHIBITED.

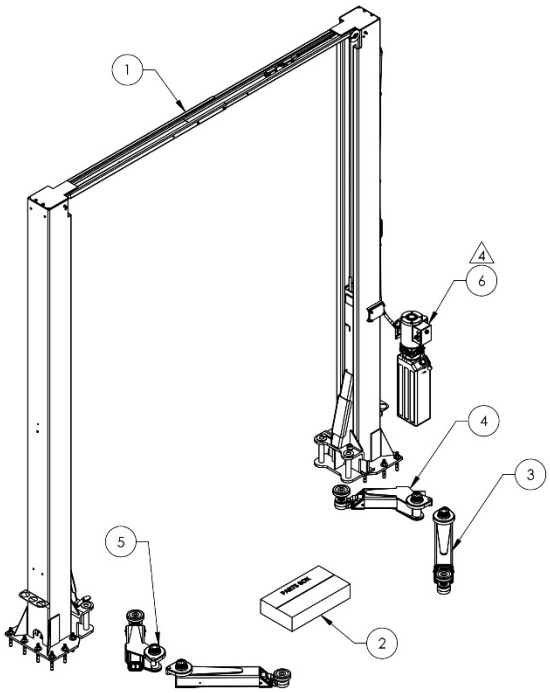

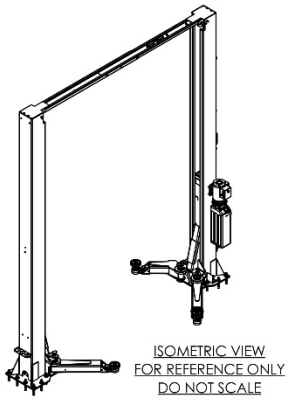

ISOMETRIC VIEW
FOR REFERENCE ONLY
DO NOT SCALE

ITEM NO	PART NUMBER	DESCRIPTION	QTY
1	5245298	10APX LIFT SUPERSTRUCTURE	1
2	5250403	10APX PARTS BOX	1
3	5211004	9APF/10AP TRIPLE TELESCOPING LONG ARM, PRE-ASSEMBLY KIT	2
4	5211005	9APF/10AP TRIPLE TELESCOPING ASYMMETRIC LEFT ARM, PRE-ASSEMBLY KIT	1
5	5211006	9APF/10AP TRIPLE TELESCOPING ASYMMETRIC RIGHT ARM, PRE-ASSEMBLY KIT	1
6	REF	POWER UNIT	1

DO NOT SCALE DRAWING

	NAME	DATE
DRAWN	TM	03/11/2025
CHECKED		

BP BendPak.
30440 AGOURA RD.
AGOURA HILLS, CA 91301

DIMENSIONS ARE IN MM

THIRD ANGLE PROJECTION

TITLE: 10APX PRODUCTION LIFT VER D

SIZE A | DWG. NO. 5260728 | REV

SCALE: 1:30 | SHEET 1 OF 3

PROPRIETARY AND CONFIDENTIAL
THE INFORMATION CONTAINED IN THIS DRAWING IS THE SOLE PROPERTY OF BENDPAK INC. ANY REPRODUCTION IN PART OR AS A WHOLE WITHOUT THE WRITTEN PERMISSION OF BENDPAK INC. IS PROHIBITED.

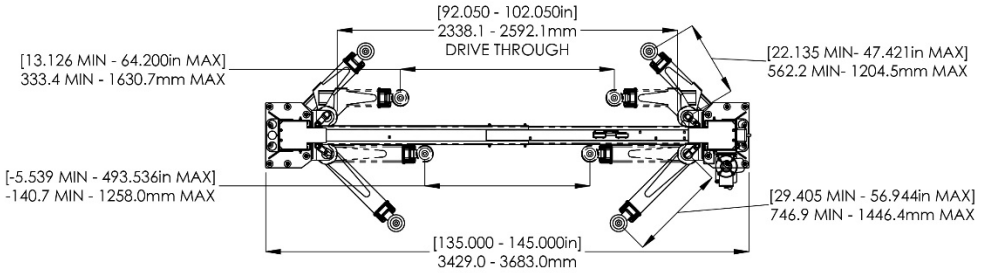

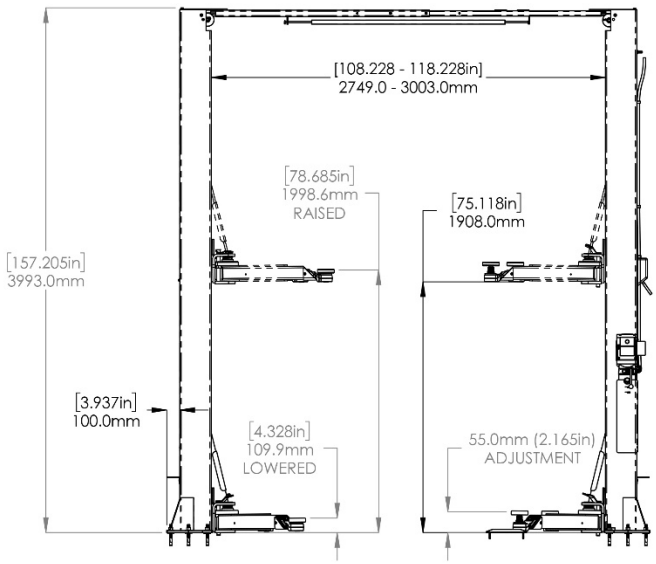

BP BendPak.
30440 AGOURA RD.
AGOURA HILLS, CA 91301

TITLE: 10APX PRODUCTION LIFT VER D

SIZE A | DWG. NO. 5260728 | REV

SCALE: 1:34 | SHEET 2 OF 3

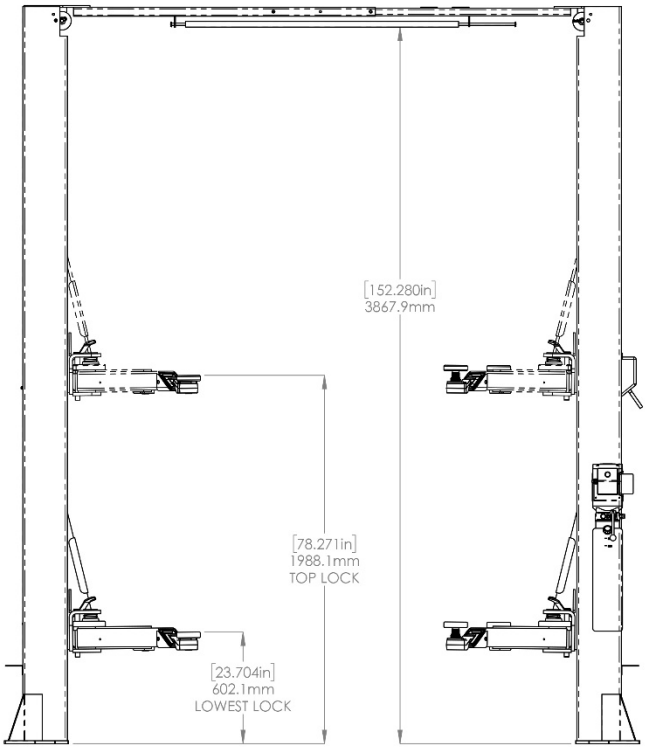

BendPak
30440 AGOURA RD.
AGOURA HILLS, CA 91301

TITLE: 10APX PRODUCTION LIFT VER D

SIZE	DWG. NO.	REV
A	5260728	

SCALE: 1:22 — SHEET 3 OF 3

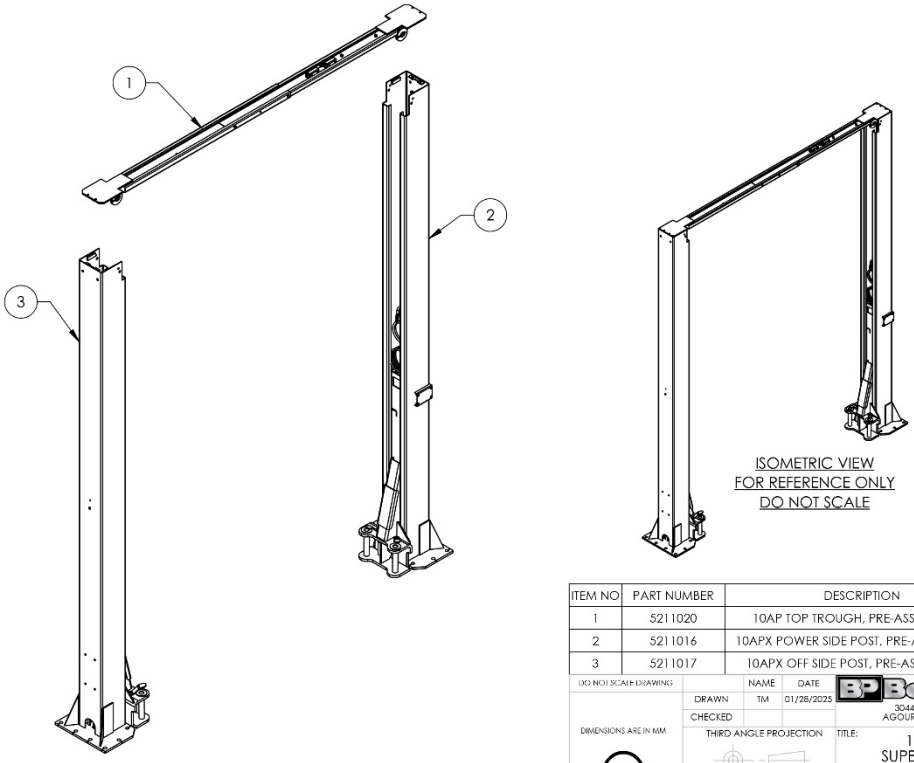

ITEM NO	PART NUMBER	DESCRIPTION	QTY
1	5211020	10AP TOP TROUGH, PRE-ASSEMBLY KIT	1
2	5211016	10APX POWER SIDE POST, PRE-ASSEMBLY KIT	1
3	5211017	10APX OFF SIDE POST, PRE-ASSEMBLY KIT	1

DO NOT SCALE DRAWING

	NAME	DATE
DRAWN	TM	01/28/2025
CHECKED		

DIMENSIONS ARE IN MM

THIRD ANGLE PROJECTION

PROPRIETARY AND CONFIDENTIAL
THE INFORMATION CONTAINED IN THIS DRAWING IS THE SOLE PROPERTY OF BENDPAK INC. ANY REPRODUCTION IN PART OR AS A WHOLE WITHOUT THE WRITTEN PERMISSION OF BENDPAK INC. IS PROHIBITED.

BendPak
30440 AGOURA RD.
AGOURA HILLS, CA 91301

TITLE: 10APX LIFT SUPERSTRUCTURE

SIZE	DWG. NO.	REV
A	5245298	

SCALE: 1:30 — SHEET 1 OF 1

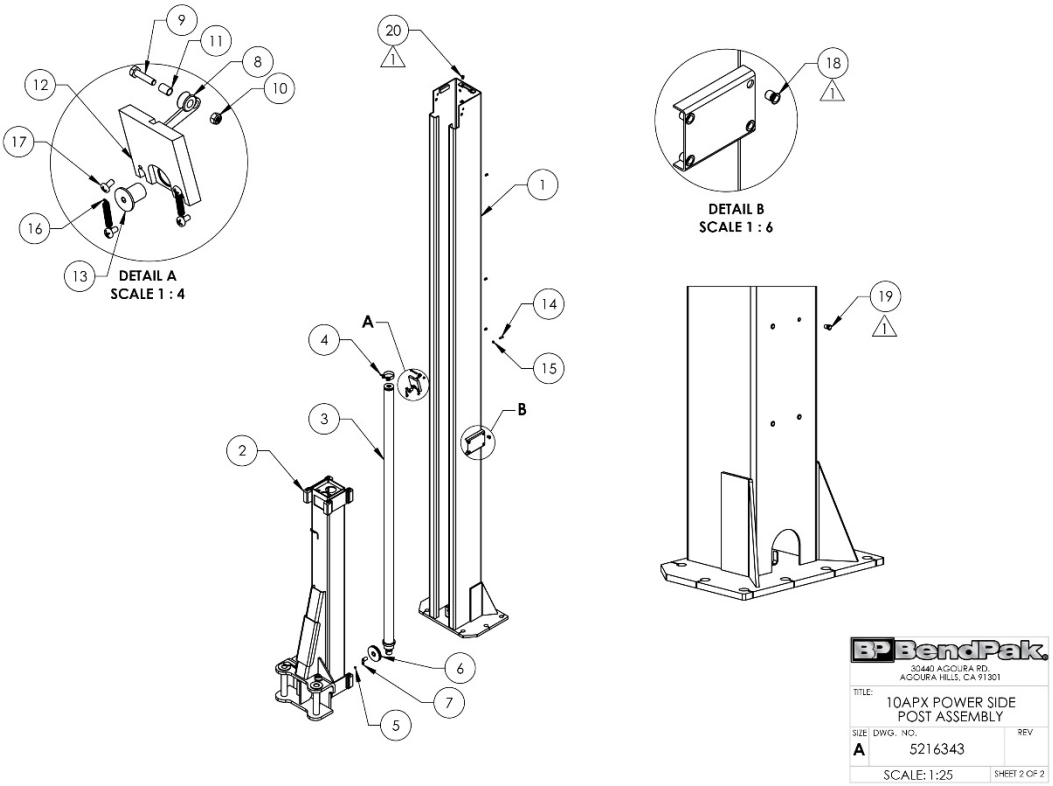
DETAIL A
SCALE 1 : 4
DETAIL B
SCALE 1 : 6
BP BendPak
30440 AGOURA RD.
AGOURA HILLS, CA 91301
TITLE:
10APX POWER SIDE
POST ASSEMBLY
SIZE
A
DWG. NO.
5216343
REV
SCALE: 1:25
SHEET 2 OF 2

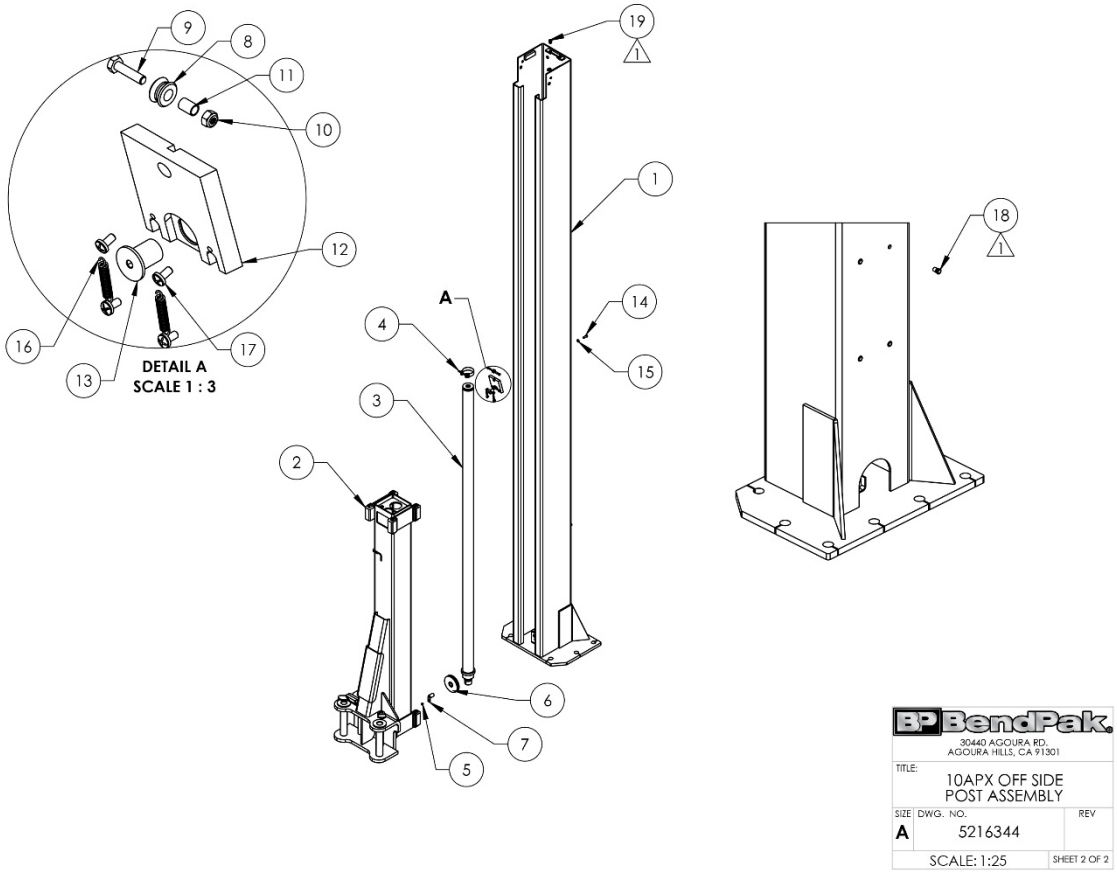
DETAIL A
SCALE 1 : 3
BP BendPak
30440 AGOURA RD.
AGOURA HILLS, CA 91301
TITLE:
10APX OFF SIDE
POST ASSEMBLY
SIZE
A
DWG. NO.
5216344
REV
SCALE: 1:25
SHEET 2 OF 2

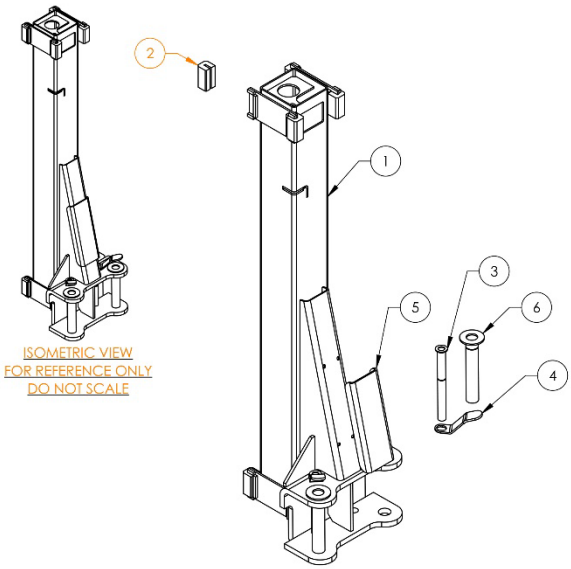

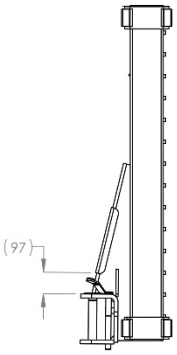

ITEM NO	PART NUMBER	DESCRIPTION	QTY
1	5601853	10APX LIFT HEAD WELDMENT	1
2	5716001	2 POST GUIDE BLOCK	8
3	5602029	9APF/10AP/SRT ARM LOCK GUIDE ROD WELDMENT, GROOVE	2
4	5701700	AP ARM LOCK RELEASE HANDLE	2
5	5930003	9APF/10AP/SRT LIFT HEAD GUSSET COVER	1
6	5601505	9APF/10AP/SRT ARM LOCK PIN WELDMENT, Ø38mm	2

DO NOT SCALE DRAWING

	NAME	DATE
DRAWN	CA	06/07/2022
CHECKED		

DIMENSIONS ARE IN MM

THIRD ANGLE PROJECTION

PROPRIETARY AND CONFIDENTIAL
THE INFORMATION CONTAINED IN THIS DRAWING IS THE SOLE PROPERTY OF BENDPAK INC. ANY REPRODUCTION IN PART OR AS A WHOLE WITHOUT THE WRITTEN PERMISSION OF BENDPAK INC. IS PROHIBITED.

BendPak.
1645 LEMONWOOD DR.
SANTA PAULA, CA 93060

TITLE: 10APX LIFT HEAD ASSEMBLY

SIZE A | DWG. NO. 5216181 | REV

SCALE: 1:12 | SHEET 1 OF 2

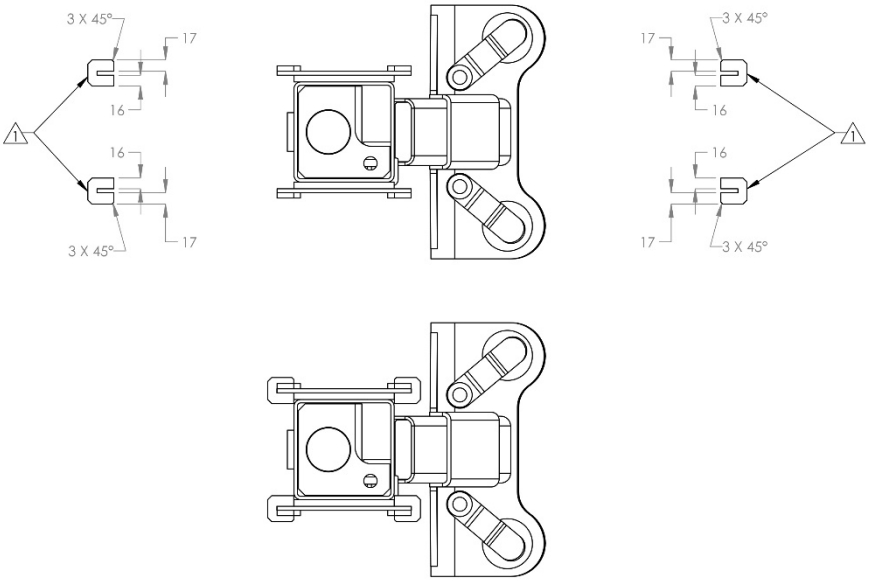

TOP VIEW

BendPak.
1645 LEMONWOOD DR.
SANTA PAULA, CA 93060

TITLE: 10APX LIFT HEAD ASSEMBLY

SIZE A | DWG. NO. 5216181 | REV

SCALE: 1:10 | SHEET 2 OF 2

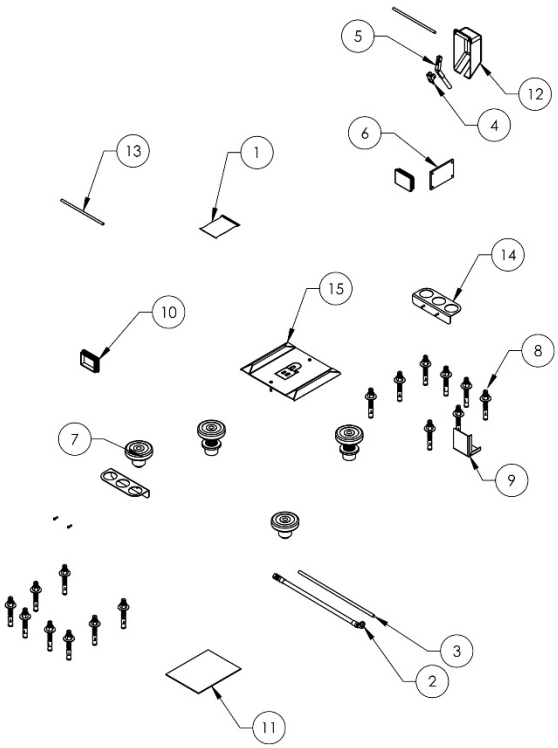

ITEM NO	PART NUMBER	DESCRIPTION	QTY
1	5174155	10AP PARTS BAG	1
2	5570278	HYDRAULIC HOSE ASSEMBLY Ø10 x 2522mm SB	1
3	5520032	CABLE, AWG 14-2, SOOW	4351mm
4	5700404	AP SAFETY PIVOT HOLDER	1
5	5761017	AP SAFETY HANDLE	1
6	5715003	POWER UNIT VIBRATION DAMPENER	1
7	5216239	ROUND ADJUSTABLE LIFT PAD ADAPTER ASSEMBLY, Ø60mm	4
8	5530337	AB 3/4" x 6.3"	16
9	5701698	10AP FOOT GUARD	1
10	5715196	POLYETHYLENE COVER BLOCK 105 x 80	2
11	5900265	10AP INSTALLATION MANUAL	1
12	5716072	AP POWER SIDE PLASTIC SAFETY COVER	1
13	5746167	DOUBLE THREADED ROD M10 x 1.5 x 275	2
14	5701660	HEIGHT ADAPTER HOLDER, 60mm	2
15	5215875	WHEEL SPOTTING DISH KIT	1

DO NOT SCALE DRAWING

	NAME	DATE
DRAWN	TM	02/21/2025
CHECKED		

DIMENSIONS ARE IN MM

THIRD ANGLE PROJECTION

PROPRIETARY AND CONFIDENTIAL
THE INFORMATION CONTAINED IN THIS DRAWING IS THE SOLE PROPERTY OF BENDPAK INC. ANY REPRODUCTION IN PART OR AS A WHOLE WITHOUT THE WRITTEN PERMISSION OF BENDPAK INC. IS PROHIBITED.

BendPak.
30440 AGOURA RD.
AGOURA HILLS, CA 91301

TITLE: 10APX PARTS BOX

SIZE A | DWG. NO. 5250403 | REV

SCALE: 1:20 | SHEET 1 OF 1

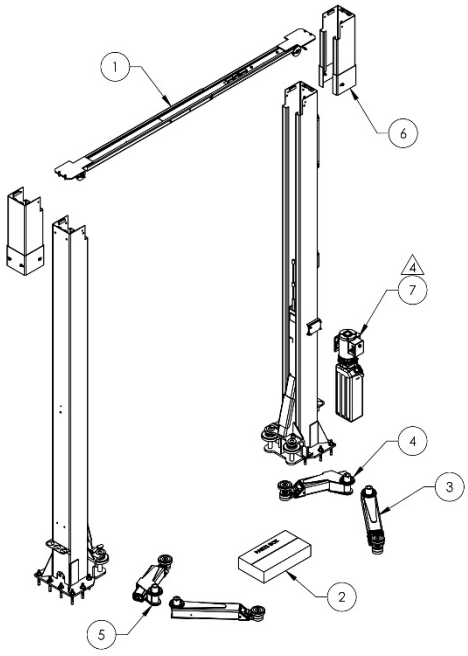

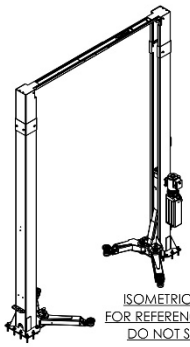

ISOMETRIC VIEW
FOR REFERENCE ONLY
DO NOT SCALE

ITEM NO	PART NUMBER	DESCRIPTION	QTY
1	5245298	10APX LIFT SUPERSTRUCTURE	1
2	5250404	10APX-181 PARTS BOX	1
3	5216216	9APF/10AP TRIPLE TELESCOPING ARM ASSEMBLY, LONG	2
4	5216217	9APF/10AP TRIPLE TELESCOPING ASYMMETRIC ARM ASSEMBLY, LEFT	1
5	5216218	9APF/10AP TRIPLE TELESCOPING ASYMMETRIC ARM ASSEMBLY, RIGHT	1
6	5216361	10AP POST EXTENSION ASSEMBLY	2
7	REF	POWER UNIT	1

DO NOT SCALE DRAWING

	NAME	DATE
DRAWN	TM	01/28/2025
CHECKED		

DIMENSIONS ARE IN MM

THIRD ANGLE PROJECTION

PROPRIETARY AND CONFIDENTIAL
THE INFORMATION CONTAINED IN THIS DRAWING IS THE SOLE PROPERTY OF BENDPAK INC. ANY REPRODUCTION IN PART OR AS A WHOLE WITHOUT THE WRITTEN PERMISSION OF BENDPAK INC. IS PROHIBITED.

BendPak.
30440 AGOURA RD.
AGOURA HILLS, CA 91301

TITLE: 10APX-181 PRODUCTION LIFT VER D

SIZE A | DWG. NO. 5260729 | REV

SCALE: 1:35 | SHEET 1 OF 5

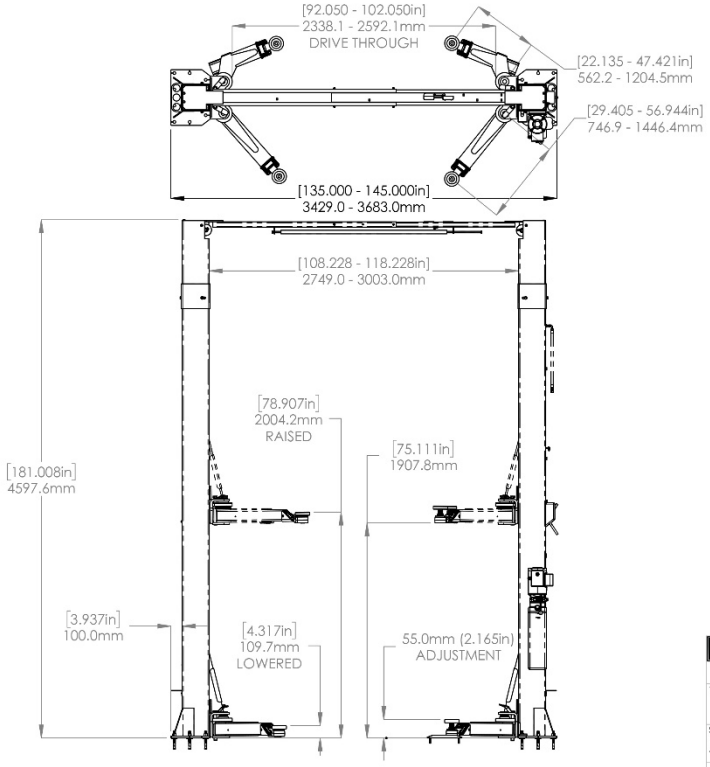

BP BendPak.
30440 AGOURA RD.
AGOURA HILLS, CA 91301
TITLE: 10APX-181 PRODUCTION LIFT VER D
SIZE A | DWG. NO. 5260729 | REV
SCALE: 1:35 | SHEET 2 OF 5

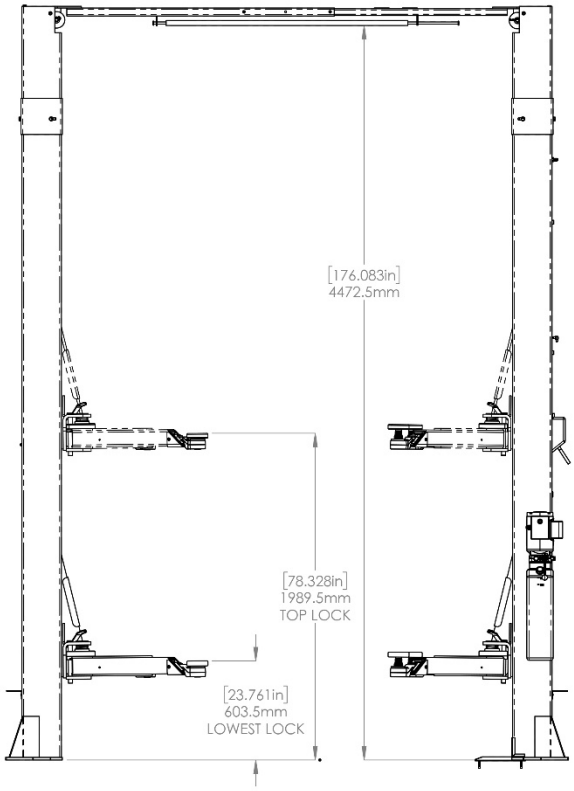

BP BendPak.
30440 AGOURA RD.
AGOURA HILLS, CA 91301
TITLE: 10APX-181 PRODUCTION LIFT VER D
SIZE A | DWG. NO. 5260729 | REV
SCALE: 1:23 | SHEET 3 OF 5

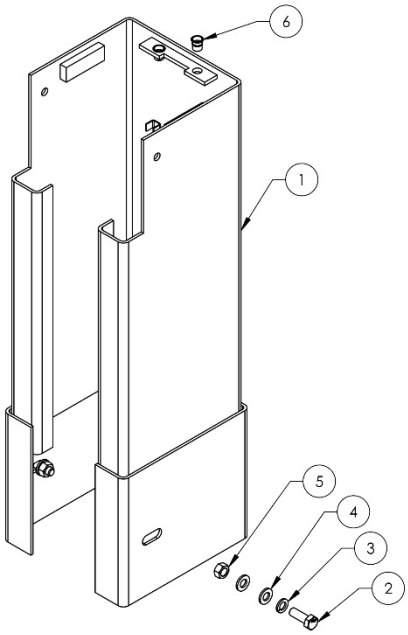

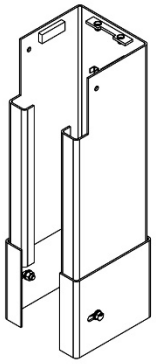

ISOMETRIC VIEW
FOR REFERENCE ONLY
DO NOT SCALE

ITEM NO	PART NUMBER	DESCRIPTION	QTY
1	5602147	10AP POST EXTENSION WELDMENT	1
2	5530076	HHB M12 x 1.75 x 35 FT, CL 10.9	4
3	5545201	WASHER M12 x 21 SL, CL 10.9	4
4	5545347	WASHER M12 x 24 FLAT, CL 10.9	8
5	5535354	NUT M12 x 1.75, CL 10.9	4
6	5535059	NUT M10 x 1.5 x 20.5, RIVET	2

DO NOT SCALE DRAWING

	NAME	DATE
DRAWN	TM	03/05/2025
CHECKED		

BP BendPak.
30440 AGOURA RD.
AGOURA HILLS, CA 91301

DIMENSIONS ARE IN MM

THIRD ANGLE PROJECTION

TITLE: 10AP POST EXTENSION ASSEMBLY

SIZE A | DWG. NO. 5216361 | REV

SCALE: 1:6 | SHEET 1 OF 1

PROPRIETARY AND CONFIDENTIAL
THE INFORMATION CONTAINED IN THIS DRAWING IS THE SOLE PROPERTY OF BENDPAK INC. ANY REPRODUCTION IN PART OR AS A WHOLE WITHOUT THE WRITTEN PERMISSION OF BENDPAK INC. IS PROHIBITED.

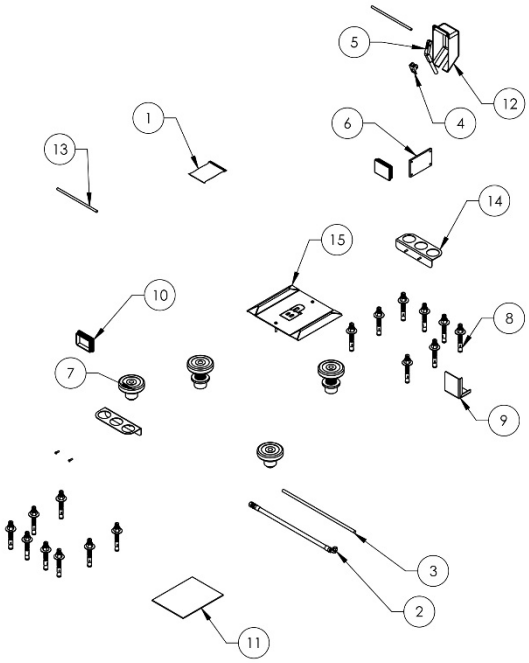

ITEM NO	PART NUMBER	DESCRIPTION	QTY
1	5174155	10AP PARTS BAG	1
2	5570278	HYDRAULIC HOSE ASSEMBLY Ø10 x 2522mm SB	1
3	5520032	CABLE, AWG 14-2, SOOW	4961mm
4	5700404	AP SAFETY PIVOT HOLDER	1
5	5761017	AP SAFETY HANDLE	1
6	5715003	POWER UNIT VIBRATION DAMPENER	1
7	5216239	ROUND ADJUSTABLE LIFT PAD ADAPTER ASSEMBLY, Ø60mm	4
8	5530337	AB 3/4" x 6.3"	16
9	5701698	10AP FOOT GUARD	1
10	5715196	POLYETHYLENE COVER BLOCK 105 x 80	2
11	5900265	10AP INSTALLATION MANUAL	1
12	5716072	AP POWER SIDE PLASTIC SAFETY COVER	1
13	5746167	DOUBLE THREADED ROD M10 x 1.5 x 275	2
14	5701660	HEIGHT ADAPTER HOLDER, 60mm	2
15	5215875	WHEEL SPOTTING DISH KIT	1

DO NOT SCALE DRAWING

	NAME	DATE
DRAWN	TM	02/21/2025
CHECKED		

BP BendPak.
30440 AGOURA RD.
AGOURA HILLS, CA 91301

DIMENSIONS ARE IN MM

THIRD ANGLE PROJECTION

TITLE: 10APX-181 PARTS BOX

SIZE A | DWG. NO. 5250404 | REV

SCALE: 1:20 | SHEET 1 OF 1

PROPRIETARY AND CONFIDENTIAL
THE INFORMATION CONTAINED IN THIS DRAWING IS THE SOLE PROPERTY OF BENDPAK INC. ANY REPRODUCTION IN PART OR AS A WHOLE WITHOUT THE WRITTEN PERMISSION OF BENDPAK INC. IS PROHIBITED.

EC Declaration of Conformity

We (name of applicant)	BendPak Inc.
of (address of applicant)	30440 Agoura Road, Agoura Hills, CA 91301

hereby declare that the equipment submitted for Type Approval is in conformity with the requirements of following EU Directives:

2006/42/EC	Machinery Directive
2014/30/EU	Electromagnetic Compatibility (EMC) Directive

We hereby declare that:

Equipment:	10AP Series Two-Post Lifts, 10,000-Pound Capacity	
Model numbers:	10AP, 10APX, 10AP-168, 10APX-181	
Serial Numbers:	•10AP	5175304-00001 to 5175304-99999
	•10AP-168	5175305-00001 to 5175305-99999
	•10APX	5175306-00001 to 5175306-99999
	•10APX-181	5175307-00001 to 5175307-99999

is in conformity with the applicable requirements of the following documents:

Ref. No.	Title	Edition/date
EN 1493	Safety of Machinery – Vehicle Servicing lifts	2022
EN 60204-1	Electrical Equipment of Machines	2018
EN 61000-6-2	Electromagnetic compatibility - Immunity for industrial environments. (Performance Class A)	2019
EN 61000-6-4	Electromagnetic compatibility - Emissions for industrial environments	2019

The machine has been the subject of a type examination by CTI-CEM International Ltd (Notified Body Number 2845) & granted Type Examination Certificate number: C-353-44-0718-23-02

Signed by: Javier Arias P.

Full Name:	Javier Arias
Title:	Vice-President Operations
Location:	Agoura Hills, CA 91301

CE

Date: October 2, 2024

The technical documentation only for the machinery certified to the Test Standards as required by the Machinery Directive, is available from:

Name:	CTI-CEM International Ltd
Address:	Unit 200 Greenogue Business Park, Grants Lane, Rathcoole, Co. Dublin, Ireland

Automotive Lift Institute (ALI) Store

You probably checked the **ALI's Directory of Certified Lifts** (www.autolift.org/ali-directory-of-certified-lifts/) before making your most recent Lift purchase, but did you know the **ALI Store** (www.autolift.org/ali-store/) offers a wide variety of professional, easy-to-use, and reasonably priced training and safety materials that will make your garage a safer place to work?

The ALI Store is your trusted source for workplace safety!

Lifting It Right Online Certificate Course. Make *sure* you and your people are lifting vehicles the right way.

ALI Lift Inspector Certification Program Registration. Become a ALI Certified Lift Inspector.

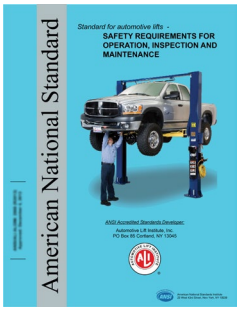

ANSI/ALI ALOIM Standard for Automotive Lifts. Safety Requirements for Operation, Inspection, and Maintenance.

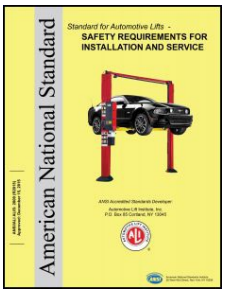

ANSI/ALI ALIS Standard. Safety Requirements for Installation and Service.

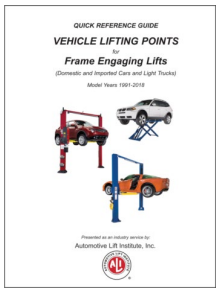

Guide to Hitting Vehicle Lifting Points for Frame-Engaging Lifts. Don't eyeball your lifting points, ***know*** where they are.

Lift Operator Safety Materials. Five safety documents in a single package.

Lifting It Right. A hardcopy version of the *Lifting It Right* safety manual from the Automotive Lift Institute.

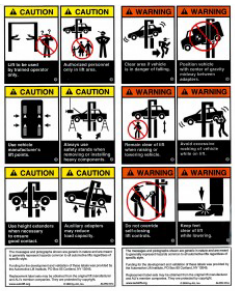

Uniform Warning Labels and Placards for 2-Posts. Labels in Mandarin, French Canadian, and Spanish are also available.

Safety Tips Card. Reminds your people of 13 key safety tips to follow daily.

Visit today and get the training and materials you need to work safely:
www.autolift.org/ali-store/.

Maintenance Log

Maintenance Log

30440 Agoura Rd.
Agoura Hills, CA 91301 USA
bendpak.com

© 2025 by BendPak Inc. All rights reserved.